IO-360-L2A
Illustrated Parts Catalog

June 2025

PC-IO-360-L2A (Supersedes PC-406-L2A)

© 2025

652 Oliver Street
Williamsport, PA 17701

IO-360-L2A Illustrated Parts Catalog

Lycoming Part Number: PC-IO-360-L2A (Supersedes PC-406-L2A)

For additional information:

Mailing address:

Lycoming Engines
652 Oliver Street
Williamsport, PA 17701 U.S.A.

Phone:

Factory: U.S. and Canada toll free: +1(800) 258-3279
International Customers: +1(570) 323-6181

Lycoming's regular business hours are Monday through Friday from 8:00 A.M. through 5:00 P.M. Eastern Time (-5 GMT)

Visit us online at:

www.lycoming.com

©2025 Lycoming. All Rights Reserved.
Lycoming and "Powered by Lycoming" are trademarks or registered trademarks of Lycoming.
Lycoming Engines, a division of AVCO Corporation.

All brand and product names referenced in this publication are trademarks or registered trademarks of their respective companies.

Record of Revisions

NOTICE: Service Documents with a later release date than this parts catalog override parts information in this document.

Rev No.	Revision Changes	Issue Date
New	Initial Release of PC-IO-360-L2A (Supersedes PC-406-L2A)	June 2025

Copyright, Lycoming Engines
Lycoming Engines is a division of Avco Corporation

This page intentionally left blank

Effectivity: IO-360-L2A Engines
Copyright, Lycoming Engines
Lycoming Engines is a division of Avco Corporation

TABLE OF CONTENTS

Subject	Chapter	Page
Frontal		
Record of Revisions		i
Table of Contents		iii
Introduction		v
Abbreviations and Acronyms		ix
Oversize and Undersize Parts Listing		xi
Electrical Power	**24-20**	
DC Generation	24-20	
1. Alternator Mounting and Attaching Parts		0-1
2. Alternator Mounting and Attaching Parts		2-3
3. Alternator Assembly and Belt		4-5
Reciprocating Engine	**72-00**	
Power Section	72-20	
1. Crankcase Assembly		6-7
2. Crankcase Related Parts		8-9
3. Crankshaft Assembly and Related Parts		10-11
4. Crankshaft Idler Gears, Tachometer Drive and Camshaft		12-13
5. Crankcase Attaching Parts		14-15
Cylinder Section	72-30	
1. Connecting Rods, Pistons and Ring Assemblies		16-17
2. Cylinder Assembly		18-19
3. Valve Assembly and Related Parts		20-21
4. Cylinder Related Parts and Spark Plugs		22-23
5. Cylinder Head Drain Tubes, Intercylinder Cooling Baffles, and Rocker Box Covers		24-25
6. Intake Pipes and Attaching Parts		26-27
Lubrication System	72-50	
1. Oil Level Gage		28-29
2. Oil Sump Assembly and Oil Suction Screen		30-31
Accessory Drives	72-60	
1. Accessory Housing Assembly		32-33
2. Oil Pump Assembly and Accessory Housing Attaching Parts		34-35

Copyright, Lycoming Engines
Lycoming Engines is a division of Avco Corporation

Subject	Chapter	Page
Accessory Drives (Cont.)	72-60	
3. Fuel Pump Assembly and Attaching Parts		36-37
4. Vacuum and Hydraulic Pump Drives and Covers, Propeller Governor Drive Cover		38-39
5. Oil Filter Assembly, Oil Cooler Bypass Valve and Breather Fitting		40-41
Engine and Fuel Control	**73-00**	
Fuel Distribution	73-10	
1. Fuel Injector, Fuel Manifold and Brackets		42-43
2. Fuel Lines, Fuel Hoses and Attaching Parts		44-45
3. Fuel Lines, Fuel Hoses and Attaching Parts (Inverted Manifold)		46-47
Ignition Distribution System	**74-00**	
Distribution	74-20	
1. Magnetos, Magneto Drives, and Harnesses		48-49
Starting	**80-00**	
Cranking	80-10	
1. Starter Motor and Attaching Parts		50-52
Back Section		
Service Kit Section		53-55
Numerical Index		56-60

Effectivity: IO-360-L2A Engines
Copyright, Lycoming Engines
Lycoming Engines is a division of Avco Corporation

Introduction

⚠ **CAUTION:** DO NOT USE THIS CATALOG AS AN ASSEMBLY OR INSTALLATION DOCUMENT. THIS CATALOG MUST ONLY BE USED TO IDENTIFY PARTS IN CONJUNCTION WITH THE APPLICABLE OVERHAUL MANUAL.

Purpose of this Catalog

This Illustrated Parts Catalog contains a complete list of spare parts for the Lycoming IO-360-L2A Certified Series wide cylinder flange model engines.

How to Use this Catalog

This catalog is based on the Air Transport Association (ATA) Spec100 format.

This catalog is frequently updated by Service Bulletins (SB) and Service Instructions (SI). The updated information will be incorporated into subsequent full revisions of this catalog.

The ATA two element numbering system provides consistency throughout various manuals. The bottom of each page (beyond the frontal section) contains a two element number (##-##). In the two element numbering, the first two digits represent a chapter, and the next two digits subdivide the material into a more specific section.

The ATA 100 format designates chapters by the numeric code. In the example below, Chapter 74 is for Ignition with a subsection 20 for Distribution.

EXAMPLE: **74** — **20**

Chapter	Section
Ignition	**Distribution**

NOTE: See the IPC Table of Contents for the sub-systems listed in each section.

Numerical Index

The Numerical Index is a single list of part numbers, names and their locations within the IPC. It is useful for locating parts when you only know the number or name of the part.

Description column

Indentation of a part name represents a lower level of assembly. Attaching parts have the same indentation level and are listed below the parts grouping or assembly they attach to. This column is often referred to as the “Nomenclature” on other ATA Spec manuals.

Units per Assembly Column

Where more than one assembly exists, this column contains the quantity of a specific part required in the build sequence of only one next higher assembly. The letters “AR” represent “as required” for bulk items or non-illustrated select-from-range-parts. “RF” represents items listed for reference purposes only.

Copyright, Lycoming Engines

Roller Tappets

As a product improvement, Lycoming is installing roller tappets on its aircraft engines. Wide deck engines with roller tappets are identified with an “E” suffix after the serial number dash number (Example – L-******-48E.) On rebuilt and Lycoming overhauled wide deck engines with roller tappets, the letter “A” suffix is replaced with the letter “E” suffix on the engine serial number.

The new parts include roller tappet body assembly, crankcase, camshaft, shorter push rods, shroud tubes and shroud tube seal. The engines use the same hydraulic units and the dry tappet clearance does not change. Refer to Reference 618 in the Table of Limits (SSP-1776) for dry tappet clearance values.

At this time, roller tappets are not installed in narrow deck engines.

ROLLER TAPPET PARTS ARE NOT INTERCHANGEABLE WITH CURRENT FLAT FACED TAPPETS.

If it is necessary to remove the roller tappet bodies prior to overhaul, they **must be reinstalled in the same location in the crankcase.** The roller tappets are indexed with flats in the new crankcase. It is possible to assemble the roller tappet bodies in two different orientations 180 degrees apart. Either orientation is acceptable while reinstalling. Lubricate all tappet bores, cam lobes and roller tappets with engine oil mixture only. (Refer to the latest revision of Service Instruction No. 1059.) Install the shroud tube seal in the crankcase, then install the shroud tube.

THE ROLLER TAPPETS ARE NOT FIELD REPAIRABLE AND NO DISASSEMBLY IS ALLOWED. THEREFORE, MAGNAFLUX OR ZYGLO INSPECTIONS ARE NOT ALLOWED. A VISUAL INSPECTION FOR INTEGRITY AND FREE ROTATION OF THE ROLLER ACTION IS ACCEPTABLE TO RETURN AN IN-USE ROLLER TAPPET TO SERVICE; HOWEVER, IT IS MANDATORY TO REPLACE ROLLER TAPPETS AT OVERHAUL.

Vendor Accessories

Parts coverage of Vendor Accessories used on Lycoming engines may be found in the appropriate Vendor’s Parts Catalog. A list of vendor’s addresses appears in the latest revision of Lycoming Service Letter No. L114.

Any reference in this document to the supplier’s/part manufacturer’s product, by name, trademark, part number or other description is solely for the purpose of identification and does not indicate or infer that Lycoming accepts responsibility for quality control and/or airworthiness of parts, which do not pass through the Lycoming quality control system.

Environmental Compliance

Lycoming is concerned with preserving the environment. Lycoming strongly urges engine owners and repair/overhaul personnel to observe and comply with all federal, state, and local environmental regulations when solvents, paint, fuel, oil, chemicals, or other consumables are used in operating, maintaining, or overhauling an engine component. Please share our concern for, and commitment to a clean earth, clean water, and especially clean air for succeeding generations of flyers.

Copyright, Lycoming Engines
Lycoming Engines is a division of Avco Corporation

Perspective of References

In this manual, all references to locations of various components will be designated as if viewing the engine from the rear (or anti-propeller) end. The front of the engine is considered to be the propeller end and the oil sump is considered to be on the bottom of the engine. Cylinders are numbered from front to rear with the odd-numbered cylinders on the right-hand side. The firing order for this engine is 1-3-2-4

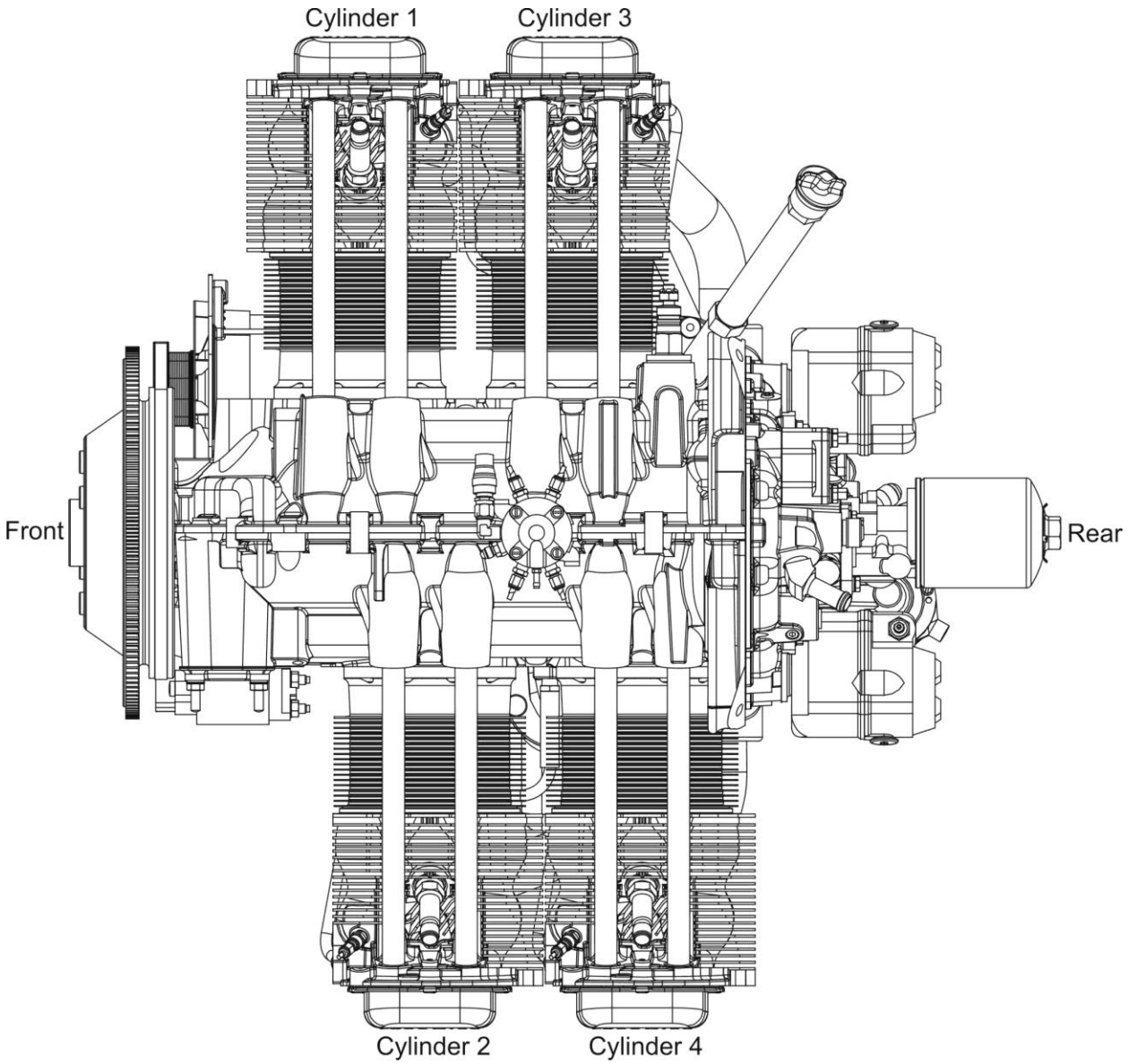

Top View of Engine

How to Order Parts and Publications

An Oversize and Undersize Parts List is included in the front section of this catalog to aid in ordering parts as necessary during overhaul.

To order parts:

1. Contact the applicable Customer Service Hot Lines:

   U.S. and Canada toll free - +1-800-258-3279

   International Customers - +1-570-323-6181

   8:00 A.M. – 5:00 P.M. EST (-5GMT) Monday through Friday
2. Give the model and serial number of your engine.
3. Give the part number, nomenclature, and quantity.

This publication eventually will be available for viewing and download on the Lycoming.com website.

To supply any comments, suggestions, or corrections to this parts catalog, go online to the Lycoming.com website on the internet.

NOTE: The owner of the manual must give notification to the factory for a change of address.

©2025 by Lycoming. “All Rights Reserved.” All Lycoming publications are to be considered copyrighted and may not be reproduced without permission of the company.

Abbreviations and Acronyms

A	
Adj.	Adjustable
amp.	Ampere
Assy	Assembly
F	
F	Flat Tappet
Fill.	Fillister
H	
Hex.	Hexagon
I	
I.D.	Inside Diameter
M	
mm	Millimeter
N	
No.	Number
NPT	National Pipe Taper (thread)
O	
O.D.	Outside Diameter
P	
P/N	Part Number
psi	Pounds per square inch
RT	Roller Tappet

Copyright, Lycoming Engines

This page intentionally left blank

Copyright, Lycoming Engines
Lycoming Engines is a division of Avco Corporation

OVERSIZE AND UNDERSIZE PARTS LISTING

Part No.	Description	Oversize (in.)								Undersize (in.)	
		P02 .002	P05 .005	P10 .010	P15 .015	P20 .020	P30 .030	P40 .040	P50 .050	M03 .003	M06 .006
18D26098	BEARING									X	X
18A26093	BEARING									X	X
18M26105	BEARING									X	X
LW-13792	SEAL								X		
72155-S	BUSHING		X	X	X	X					
75656-S	BUSHING		X	X	X	X					
75657-S	BUSHING		X	X	X	X					
STD-1065	DOWEL	X	X	X	X						
74241	RING			X							
14H29884	RING			X		X					
72057	SEAT		X	X		X	X				
72058	SEAT		X	X		X	X				
61681*	GUIDE		X	X		X	X	X			
16R22291*	GUIDE		X	X		X	X	X			
66610	BUSHING		X	X							

* - Reference Figure 9 items no. 4 and 5 for valve guides.

NOTE

When ordering oversize and undersize parts, be sure to specify the required oversize and undersize dimension along with the proper part number. For example, to order bearing P/N 18D26098 in .003 in. undersize, order P/N 18D26098-M03. Undersize code letter is “M” while oversize code letter is “P”. These letters are then followed by the number designating the size in thousandths of an inch.

Copyright, Lycoming Engines

Lycoming Engines is a division of Avco Corporation

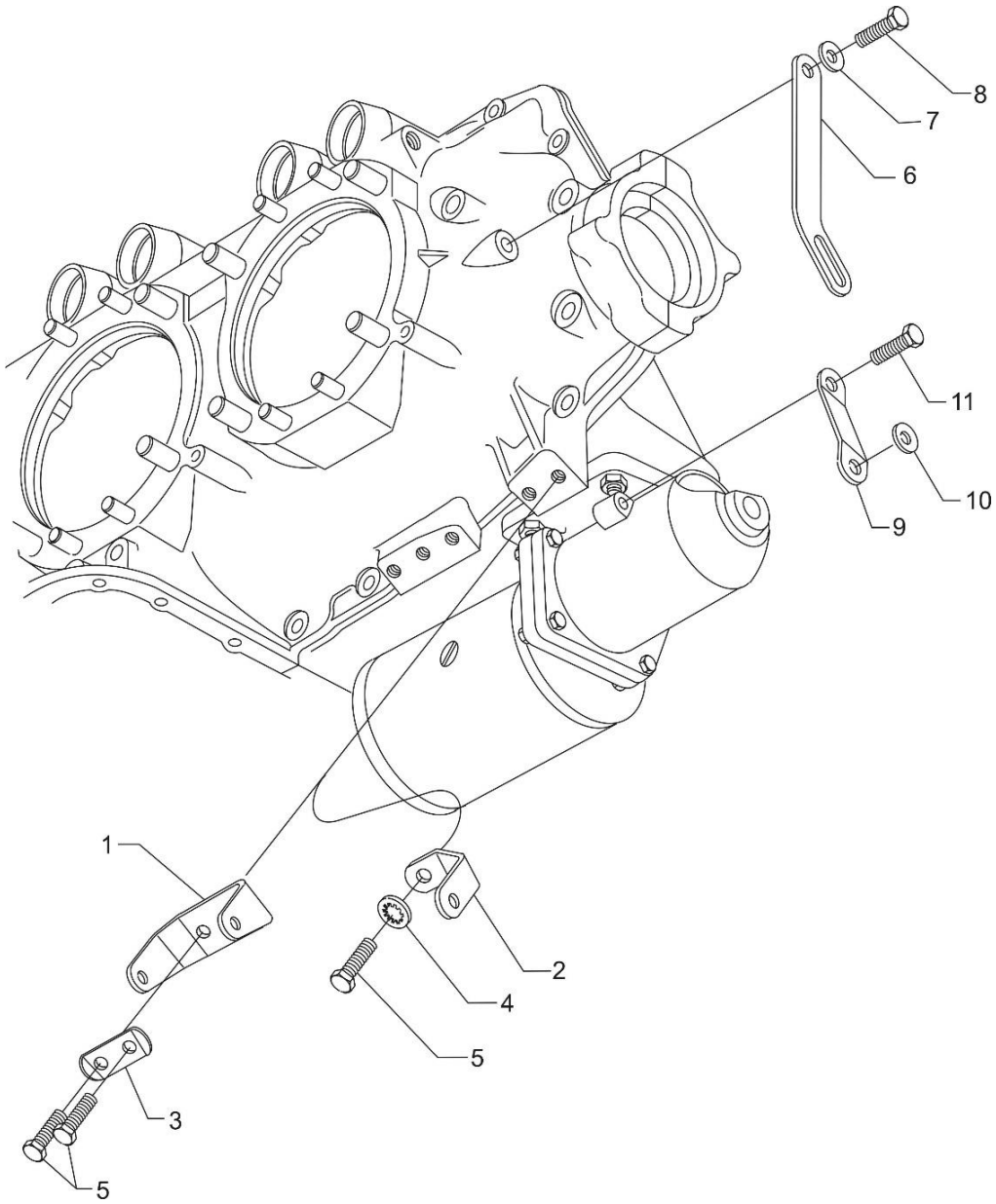

Figure 1
Alternator Mounting and Attaching Parts

Effectivity: IO-360-L2A Engines
Copyright, Lycoming Engines
Lycoming Engines is a division of Avco Corporation

DC Generation

FIGURE 1 – ALTERNATOR MOUNTING AND ATTACHING PARTS

Figure Item	Code	Part Number	Description	Units per Assembly
1		07A21443	BRACKET, Alternator	1
2		LW-13365	BRACE, Alternator bracket	1
3		73383	LOCKPLATE, 5/16 bolt x 1.00	1
4		STD-475	WASHER, 5/16 lock, internal teeth	1
5		LW-31-0.94	BOLT, 5/16-18 x 15/16 long, hex. head	3
6		07F29604	LINK, Alternator adjusting	1
7		STD-35	WASHER, 5/16 plain	1
8		LW-31H0.88	BOLT, 5/16-18 x 7/8 long, hex. head, drilled	1
9		76908	STRUT, Alternator support	1
10	*	STD-2197	WASHER, 5/16 I.D. x 13/16 O.D. x 1/16	1
11		LW-31H1.06	BOLT, 5/16-18 x 1-1/16 long, hex. head, drilled	1

* Shim 76908 strut with STD-2197 washer.

NOTE: Alternator is not supplied for this configuration.

Copyright, Lycoming Engines

Lycoming Engines is a division of Avco Corporation

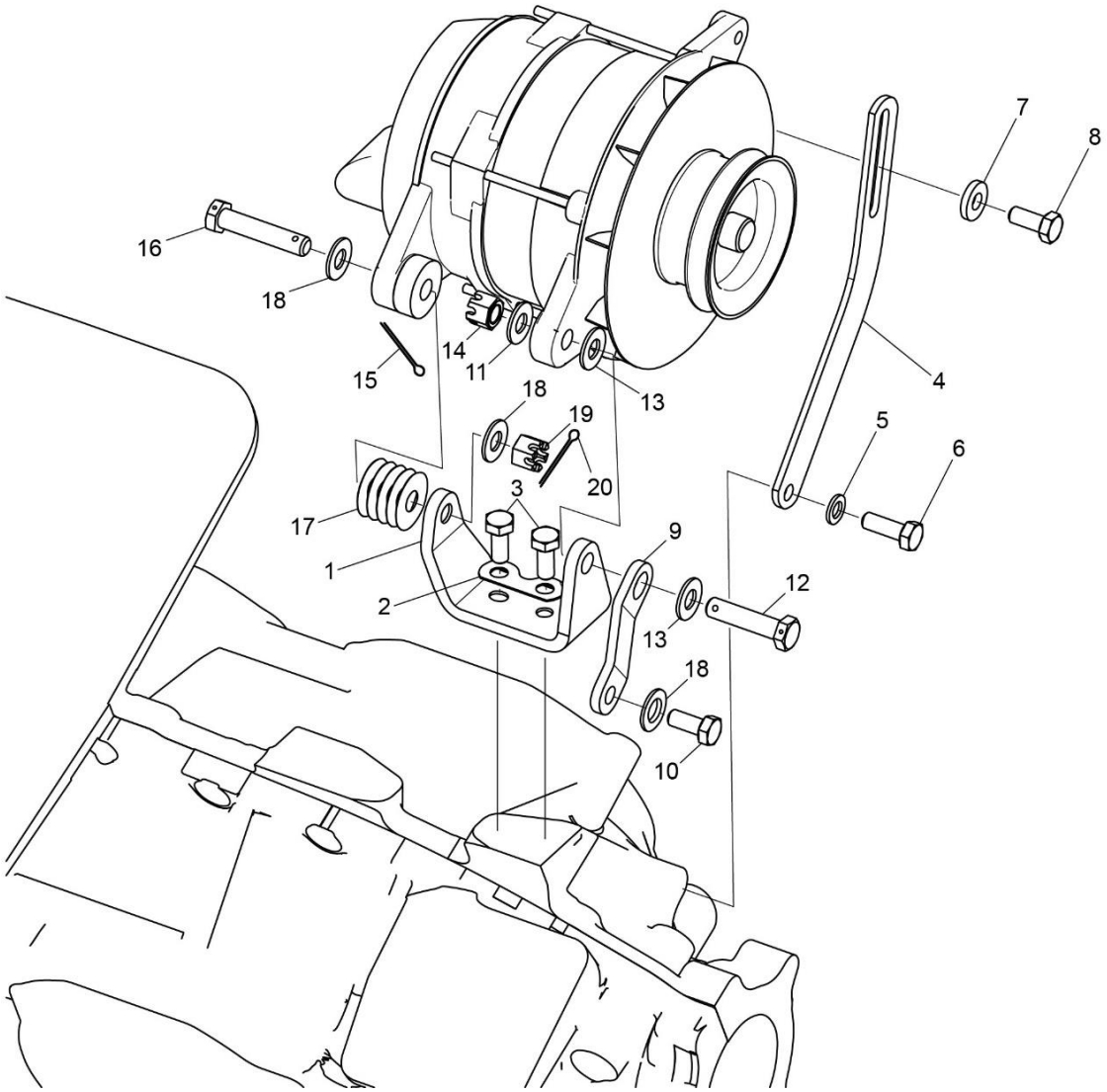

Figure 2
Alternator Mounting and Attaching Parts

Effectivity: IO-360-L2A Engines
Copyright, Lycoming Engines
Lycoming Engines is a division of Avco Corporation

DC Generation

FIGURE 2 – ALTERNATOR MOUNTING AND ATTACHING PARTS

Figure Item	Code	Part Number	Description	Units per Assembly
1		07A19474	BRACKET, Alternator	1
2		73383	LOCKPLATE, 5/16 bolt x 1.00	1
3		LW-31-0.94	BOLT, 5/16-18 x 15/16 long, hex. head	2
4		75380	LINK, Alternator adjusting	1
5		STD-35	WASHER, 5/16 plain	1
6		LW-31H0.75	BOLT, 5/16-18 x 3/4 long, hex. head, drilled	1
7		STD-1727	WASHER, Plain, 3/4 O.D. x 11/32 I.D. x 1/8	1
8		LW-31H0.75	BOLT, 5/16-18 x 3/4 long, hex. head, drilled	1
9		07F23268	STRUT, Alternator support	1
10		LW-31H0.75	BOLT, 5/16-18 x 3/4 long, hex. head, drilled	1
11		STD-690	WASHER, 13/16 O.D. x 25/64 I.D. x 1/16 thick	1
12		AN6-17	BOLT, 3/8-24 x 1-15/16 long, hex. head	1
13		STD-690	WASHER, 13/16 O.D. x 25/64 I.D. x 1/16 thick	**AR**
14		STD-872	NUT, 3/8-24 slotted	1
15		STD-713	COTTER PIN, 3/32 diameter x 3/4 long	1
16		AN6-16	BOLT, 3/8-24 x 1-53/64 long, hex. head	1
17		76534	SHIM, 1-1/8 O.D. x 13/32 I.D. x .005 thick (max. 5)	**AR**
18		STD-690	WASHER, 13/16 O.D. x 25/64 I.D. x 1/16 thick	**AR**
19		STD-872	NUT, 3/8-24 slotted	1
20		STD-713	COTTER PIN, 3/32 diameter x 3/4 long	1

AR as required
NOTE: Alternator is not supplied for this configuration.

Copyright, Lycoming Engines

Lycoming Engines is a division of Avco Corporation

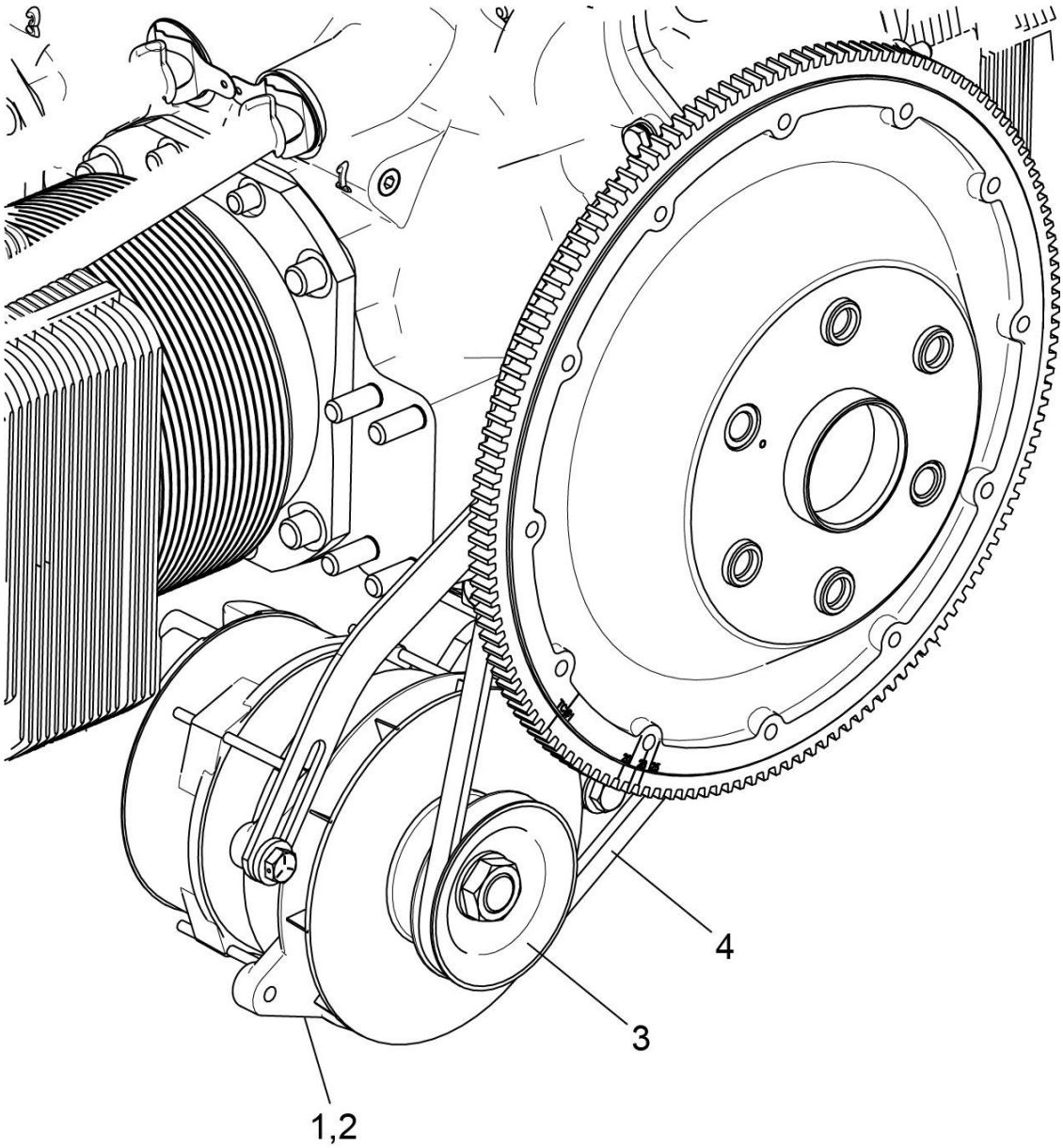

Figure 3
Alternator Assembly and Belt

Effectivity: IO-360-L2A Engines
Copyright, Lycoming Engines
Lycoming Engines is a division of Avco Corporation

DC Generation

FIGURE 3 - ALTERNATOR ASSEMBLY AND BELT

Figure Item	Code	Part Number	Description	Units per Assembly
1		32C19553	ALTERNATOR ASSEMBLY, 24V.-70 Amp.	1
		32B19549	ALTERNATOR ASSEMBLY, 12V.-70 Amp.	1
2	**V**	LW-14326	ALTERNATOR, 24V.-70 Amp. **V** ALU-8521LS	1
	V	LW-14318	ALTERNATOR, 12V.-70 Amp. **V** ALX-8521LS	1
3		36B19484	PULLEY, Alternator	1
4		37A19773-376	BELT, Alternator drive, 3/8 wide	1

V Vendor Prime Manufacturer part

NOTE: See latest revision of Lycoming Service Instruction No. 1154 for complete listing of FAA approved starters, generators, alternators, regulators and relays.

Copyright, Lycoming Engines

Lycoming Engines is a division of Avco Corporation

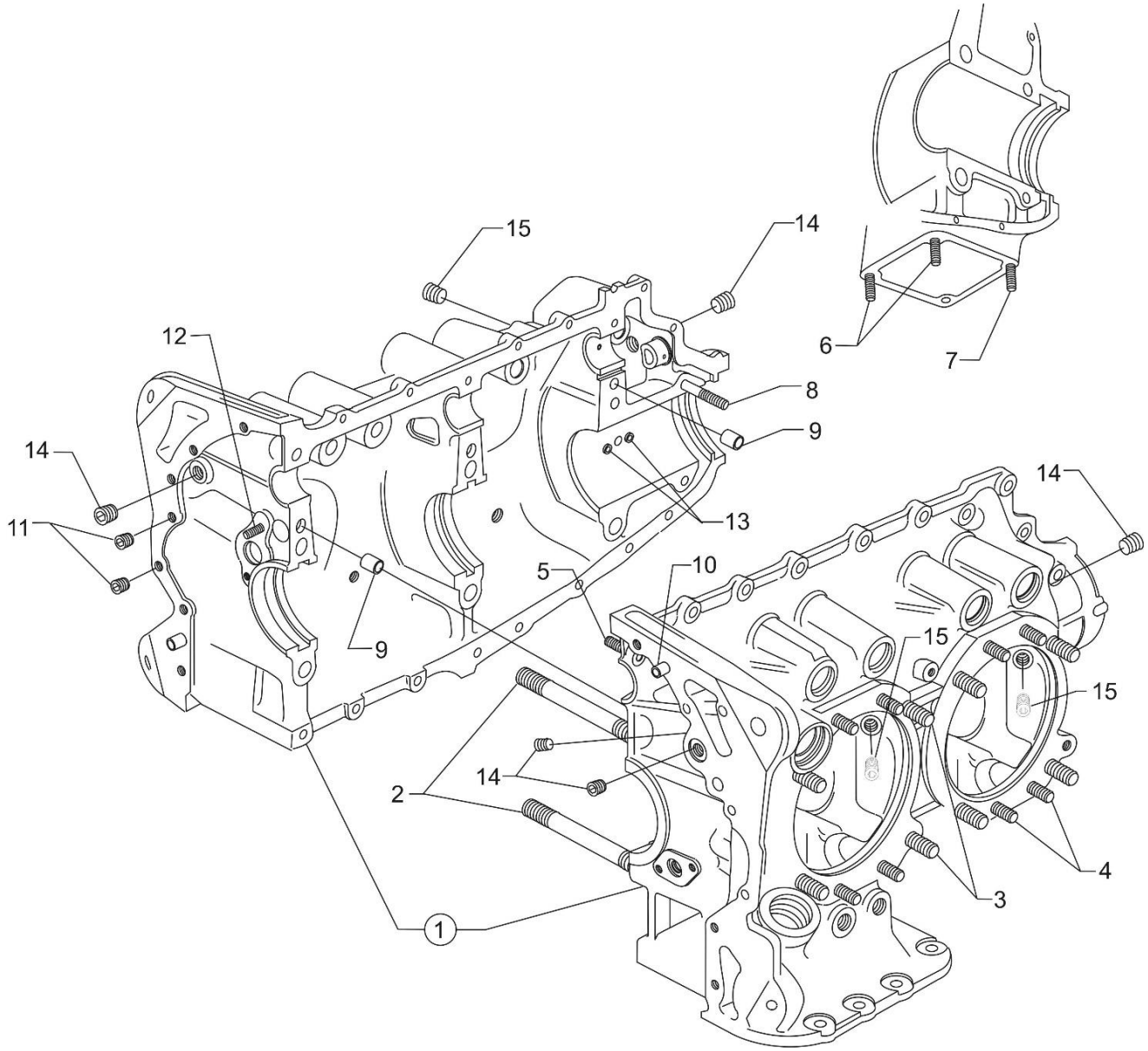

Figure 3
Crankcase Assembly

Effectivity: IO-360-L2A Engines
Copyright, Lycoming Engines
Lycoming Engines is a division of Avco Corporation

Power Section
FIGURE 3 – CRANKCASE ASSEMBLY

Figure Item	Code	Part Number	Description	Units per Assembly
1	*	LW-18402-2	CRANKCASE ASSEMBLY KIT	1
	*	LW-18402-5	CRANKCASE ASSEMBLY KIT **(Roller tappet engines)**	1
2		75154	STUD, 1/2-13 x 10-1/32 long	2
3		50-15	STUD, 1/2-13 x 1-7/8 long	8
4		38-13	STUD, 3/8-16 x 1-5/8 long	19
5		38D-17	STUD, 3/8-16 x 2-1/8 long, drilled	1
6		31C-12	STUD, 5/16-18 x 1-1/2 long	2
7		31C-13	STUD, 5/16-18 x 1-5/8 long	1
8		38-22	STUD, 3/8-16 x 2-3/4 long	1
9		STD-557	DOWEL, 1/2 dia. x 11/16 long, hollow	2
10		STD-514	DOWEL, 5/16 dia. x 1/2 long	2
11		STD-1623	INSERT, 1/4-20 Heli-coil x 3/8 long	2
12		LW-13793	STUD, 5/16-18 x 15/16 long, drilled	1
13		69796	DOWEL, Crankshaft bearing	2
14		1102	PLUG, 1/8-27 NPT, allen head	5
15		STD-1339	PLUG, 1/16-27 NPT, allen head	5

* Refer to Service Kits Section for applicable Crankcase Assembly and Governor Thru-Stud Kit Part Numbers.

Copyright, Lycoming Engines

Lycoming Engines is a division of Avco Corporation

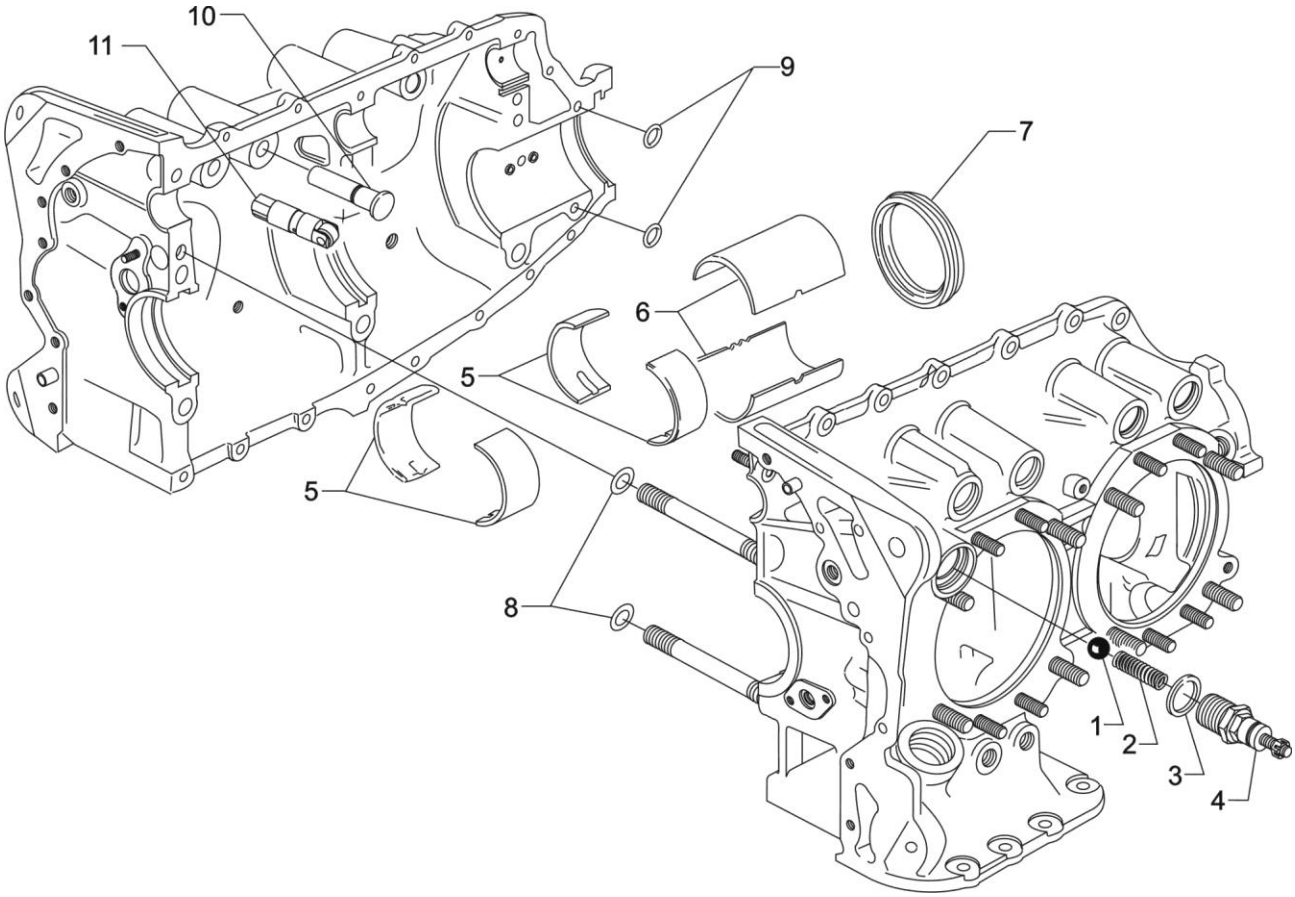

Figure 4
Crankcase Related Parts

Effectivity: IO-360-L2A Engines
Copyright, Lycoming Engines
Lycoming Engines is a division of Avco Corporation

Power Section

FIGURE 4 - CRANKCASE RELATED PARTS

Figure Item	Code	Part Number	Description	Units per Assembly
1		1028-B	BALL, 11/16 diameter	1
2	*	61084	SPRING, Oil pressure relief valve	1
	*	68668	SPRING, Oil pressure relief valve	1
	*	77467	SPRING, Oil pressure relief valve	1
	*	LW-11713	SPRING, Oil pressure relief valve	1
	*	LW-18085	SPRING, Oil pressure relief valve	1
3		06E19769-1.25	GASKET, Annular, 1-1/4 I.D.	1
4		77808	VALVE ASSEMBLY, Oil pressure relief valve, adjustable	1
5		18D26098	BEARING, Crankshaft	4
6		18A26093	BEARING, Crankshaft	2
7		LW-13792	SEAL, Crankshaft oil	1
8		72075	SEAL, Oil, 3/32 section x 7/16 I.D.	2
9		72091	RING, Oil seal, 23/64 I.D. x 7/64 diameter	2
10	**	15B26262	BODY, Hydraulic tappet **(Flat tappet)**	8
11	**	LRT23381	BODY ASSEMBLY, Hydraulic tappet **(Roller tappet engines)**	8

* Select spring to give a minimum of three threads exposed on adjusting screw to allow field adjustment. Reference latest revision of Lycoming Table of Limits SSP-1776, Part I for spring identification.

** Refer to the latest revision of Service Instruction No. SI 1011 for tappet details and crankcase requirements

Copyright, Lycoming Engines
Lycoming Engines is a division of Avco Corporation

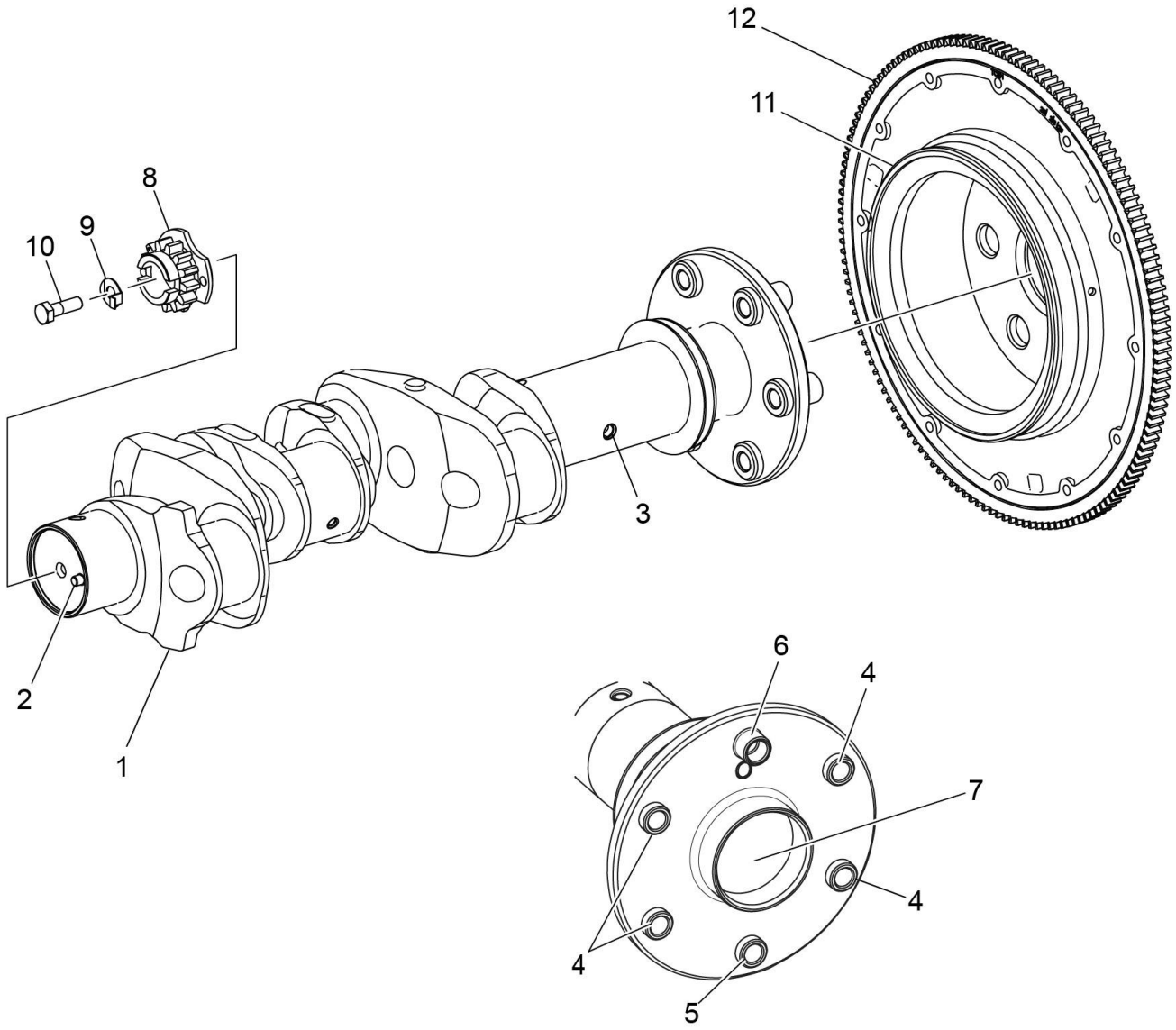

Figure 5
Crankshaft Assembly and Related Parts

Effectivity: IO-360-L2A Engines
Copyright, Lycoming Engines
Lycoming Engines is a division of Avco Corporation

Power Section

FIGURE 5 - CRANKSHAFT ASSEMBLY AND RELATED PARTS

Figure Item	Code	Part Number	Description	Units per Assembly
1		13B47121	CRANKSHAFT ASSEMBLY	1
2		STD-1065	DOWEL, Stepped, 5/16 & 1/4 diameter	1
3		68484	TUBE, Crankshaft prop, oil	1
4		75656-S	BUSHING, Propeller flange, long	4
5		72155-S	BUSHING, Propeller flange, short	1
6		75657-S	BUSHING, Propeller flange, indexing	1
7		STD-1211	PLUG, 2.00 diameter expansion	1
8	**SB***	13S19646	GEAR, Crankshaft	1
9		LW-18639	LOCKPLATE, Crankshaft gear	1
10		STD-2246	BOLT, 5/16-24 x 1.00 long	1
11		31M22045	SUPPORT ASSEMBLY, Starter ring gear	1
		LW-16471	SUPPORT ASSEMBLY, Starter ring gear	1
12		72566	GEAR, Starter ring, 12/14 pitch	1

SB Referencing Service Bulletin
***** Refer to the latest revision of Lycoming Service Bulletin No. 475 for proper installation.

Copyright, Lycoming Engines
Lycoming Engines is a division of Avco Corporation

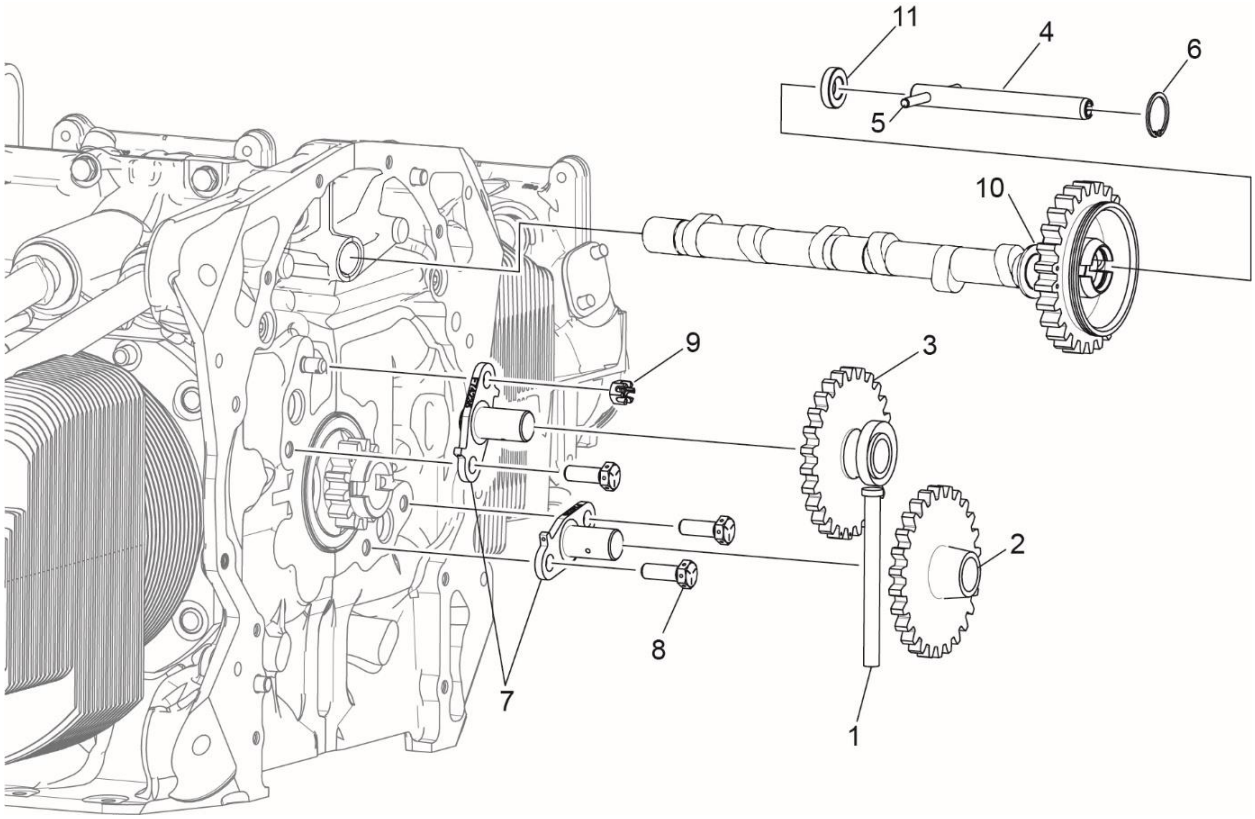

Figure 6
Crankshaft Idler Gears, Tachometer Drive and Camshaft

Effectivity: IO-360-L2A Engines
Copyright, Lycoming Engines
Lycoming Engines is a division of Avco Corporation

Power Section

FIGURE 6 - CRANKSHAFT IDLER GEARS, TACHOMETER DRIVE AND CAMSHAFT

Figure Item	Code	Part Number	Description	Units per Assembly
1		23D26777	PLUNGER, Fuel pump, long	1
2		74996	GEAR ASSEMBLY, Crankshaft idler, plain	1
3		75072	GEAR ASSEMBLY, Crankshaft idler	1
4		76121	SHAFT ASSEMBLY, Tachometer	1
5		LW-18667	PIN, 3/16 diameter x 2-11/32 long	1
6		STD-2231	RING, Internal retaining (13/16)	1
7		LW-13796	SHAFT, Crankshaft idler gear	2
8		LW-31H0.88	BOLT, 5/16-18 x 7/8 long, hex. head, drilled	3
9		STD-2168	NUT, 5/16-18 NC-3 slotted shear	1
10		LW-18840	CAMSHAFT ASSEMBLY **(Flat tappet engines)**	1
		15M23452	CAMSHAFT ASSEMBLY **(Roller tappet engines)**	1
11		76118	SPACER, Tachometer shaft centering	1

Copyright, Lycoming Engines

Lycoming Engines is a division of Avco Corporation

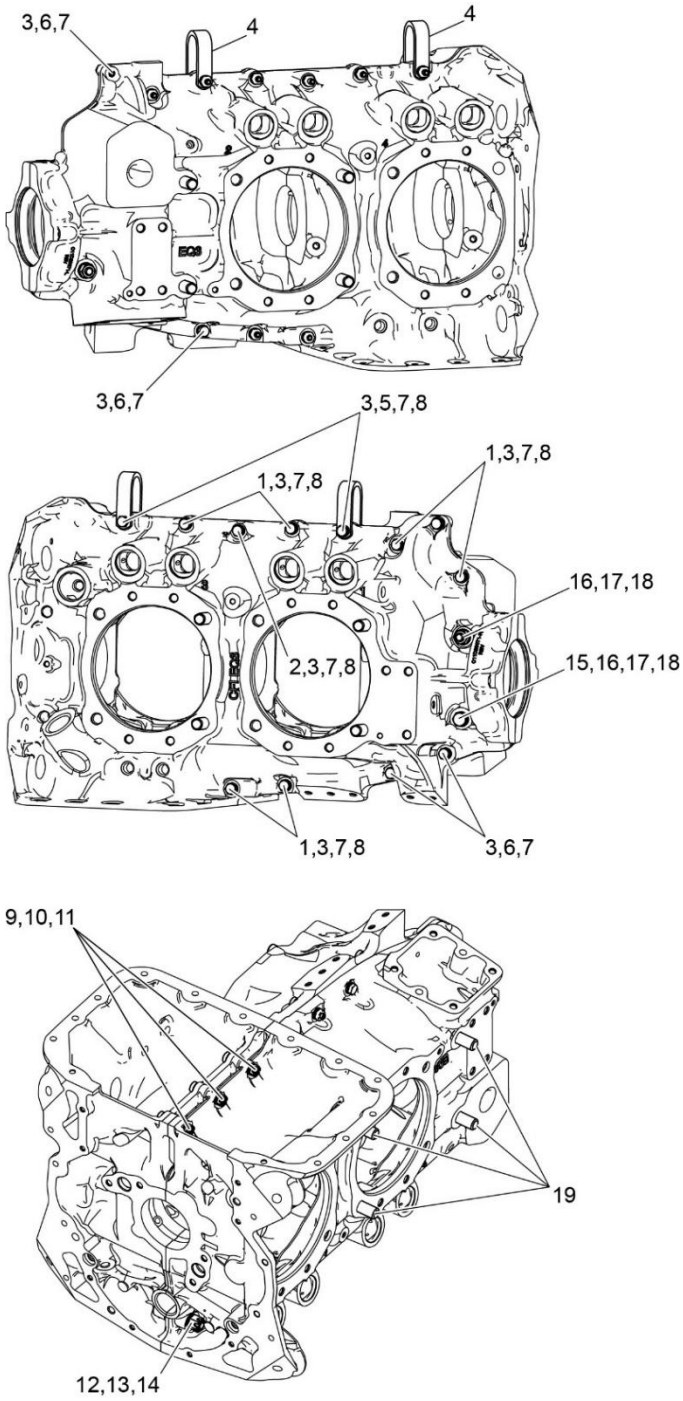

Figure 7
Crankcase Attaching Parts

Effectivity: IO-360-L2A Engines
Copyright, Lycoming Engines
Lycoming Engines is a division of Avco Corporation

Power Section

FIGURE 7 - CRANKCASE ATTACHING PARTS

Figure Item	Code	Part Number	Description	Units per Assembly
1		LW-25-1.50	BOLT, 1/4-20 x 1-1/2 long, hex. head	6
2		LW-25-1.63	BOLT, 1/4-20 x 1-5/8 long, hex. head	1
3		STD-8	WASHER, 1/4 plain	22
4		60803	STRAP, Lifting	2
5		LW-25-1.88	BOLT, 1/4-20 x 1-7/8 long, hex. head	2
6		LW-25-1.13	BOLT, 1/4-20 x 1-1/8 long, hex. head	4
7		STD-160	WASHER, 1/4 lock, internal teeth	12
8		STD-1411	NUT, 1/4-20 plain	9
9		LW-25S1.50	BOLT, 1/4-20 x 1-1/2 long, drilled end	3
10		STD-8	WASHER, 1/4-20 plain (max. 9)	**AR**
11		STD-2249	NUT, 1/4-20 slotted	3
12		STD-33	WASHER, 3/8 plain	3
13		NAS1149F0632P	WASHER, 3/8 plain (thin)	3
14		STD-872	NUT, 3/8-24 slotted	1
15		AN6-34A	BOLT, 3/8-24 x 3-37/64 long, hex. head	1
16		STD-33	WASHER, 3/8 plain	2
17		STD-678	WASHER, 3/8 lock, internal teeth	2
18		STD-596	NUT, 3/8-24 plain	2
19		76220	STUD, 1/2-20 x 10-11/16 long	4

AR as required

Copyright, Lycoming Engines

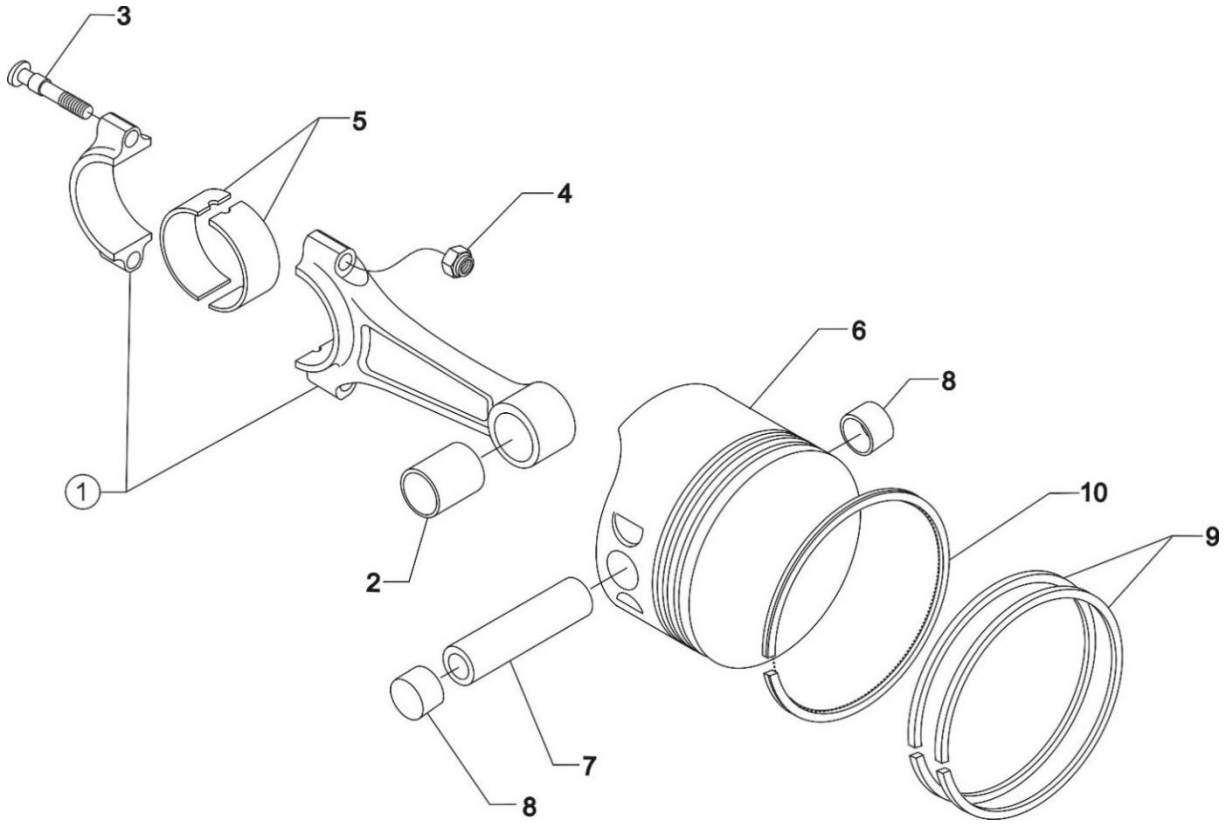

Figure 8
Connecting Rods, Pistons and Ring Assemblies

Effectivity: IO-360-L2A Engines
Copyright, Lycoming Engines
Lycoming Engines is a division of Avco Corporation

Cylinder Section

FIGURE 8 - CONNECTING RODS, PISTONS AND RING ASSEMBLIES

Figure Item	Code	Part Number	Description	Units per Assembly
1		LW-11750	CONNECTING ROD ASSEMBLY	4
2		01K28983	BUSHING, Connecting rod, upper	4
3	*	75061	BOLT, Connecting rod	8
	P	14S23890	BOLT, Connecting rod	8
4		LW-12186	NUT, Connecting rod	8
5		18M26105	BEARING, Connecting rod	8
6		14D23912	PISTON, Compression ratio, 8.50:1	4
7		LW-14078	PIN, Piston	4
8		72198	PLUG, Piston pin	8
9		74241	RING, Piston compression	8
10		14H29884	RING, Piston, oil	4

P Lycoming proprietary part. Listed for reference purposes only, cannot be purchased.
***** Service use only.

Copyright, Lycoming Engines

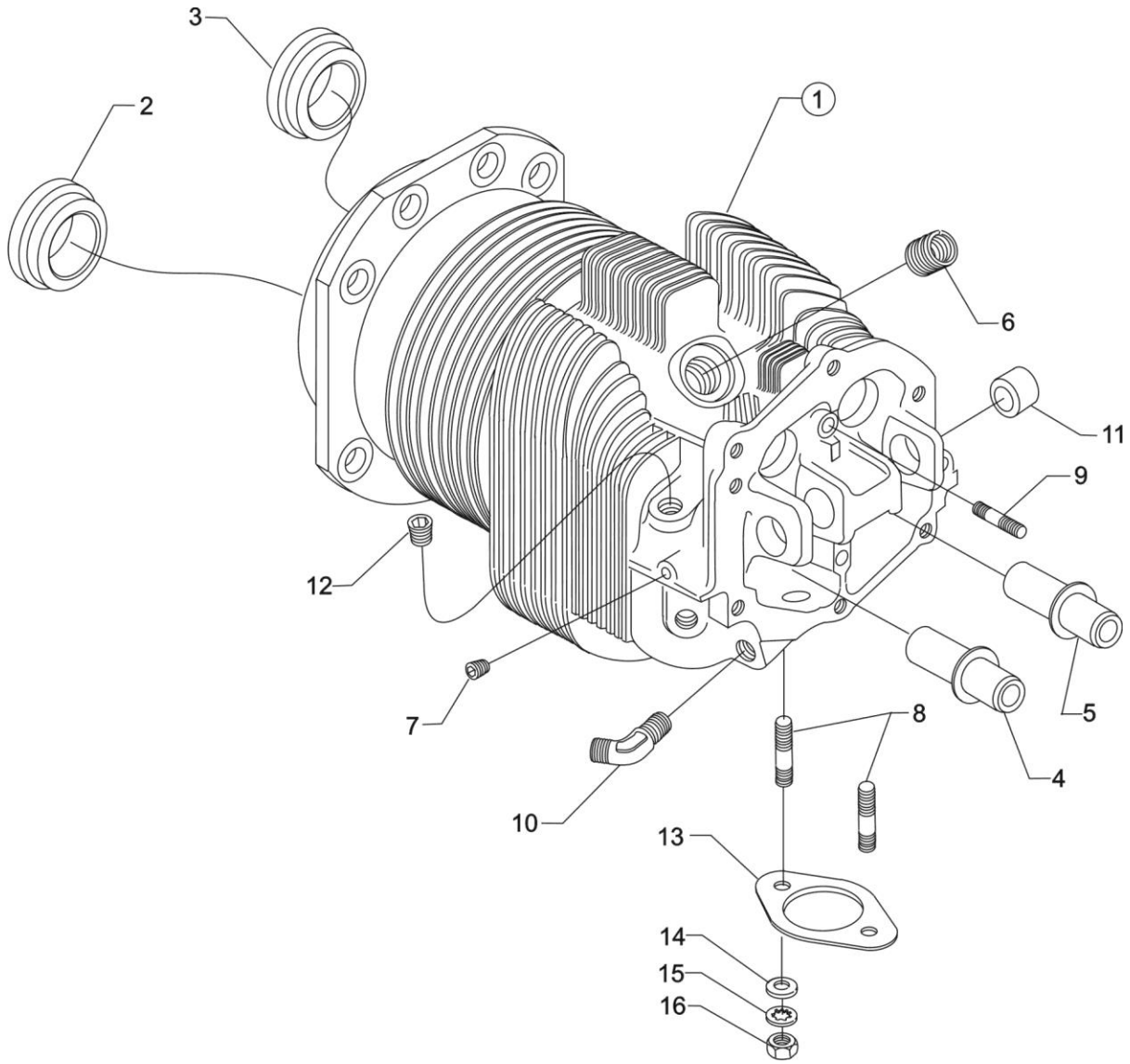

Figure 9
Cylinder Assembly

Effectivity: IO-360-L2A Engines
Copyright, Lycoming Engines
Lycoming Engines is a division of Avco Corporation

Cylinder Section

FIGURE 9 - CYLINDER ASSEMBLY

Figure Item	Code	Part Number	Description	Units per Assembly
1		16A30080-01	CYLINDER ASSEMBLY, Nitrided	4
2		72057-P20	SEAT, Intake valve	4
3		72058-P20	SEAT, Exhaust valve	4
4		76943-P30	GUIDE, Valve, intake	4
5		16R22126-P30	GUIDE, Valve, exhaust	4
6		66796	INSERT, Spark plug, 1.5 MM	8
7		STD-1353	INSERT, No. 10-24 UNC x 3/8 long	4
8		31C-12	STUD, 5/16-18 x 1-1/2 long	8
9		25C-8	STUD, 1/4-20 x 1.00 long	4
10		MS20823-6D	ELBOW, 45º, 3/8 flared tube	4
11		66610	BUSHING, Rocker shaft	16
12	*	1102	PLUG, 1/8-27 NPT, Allen head	4
13		77611	GASKET, Exhaust flange	4
14		STD-35	WASHER, 5/16 plain	8
15		STD-475	WASHER, 5/16 lock, internal teeth	8
16		STD-1410	NUT, 5/16-18 plain	8

* Used on installations without priming lines.

Copyright, Lycoming Engines

Lycoming Engines is a division of Avco Corporation

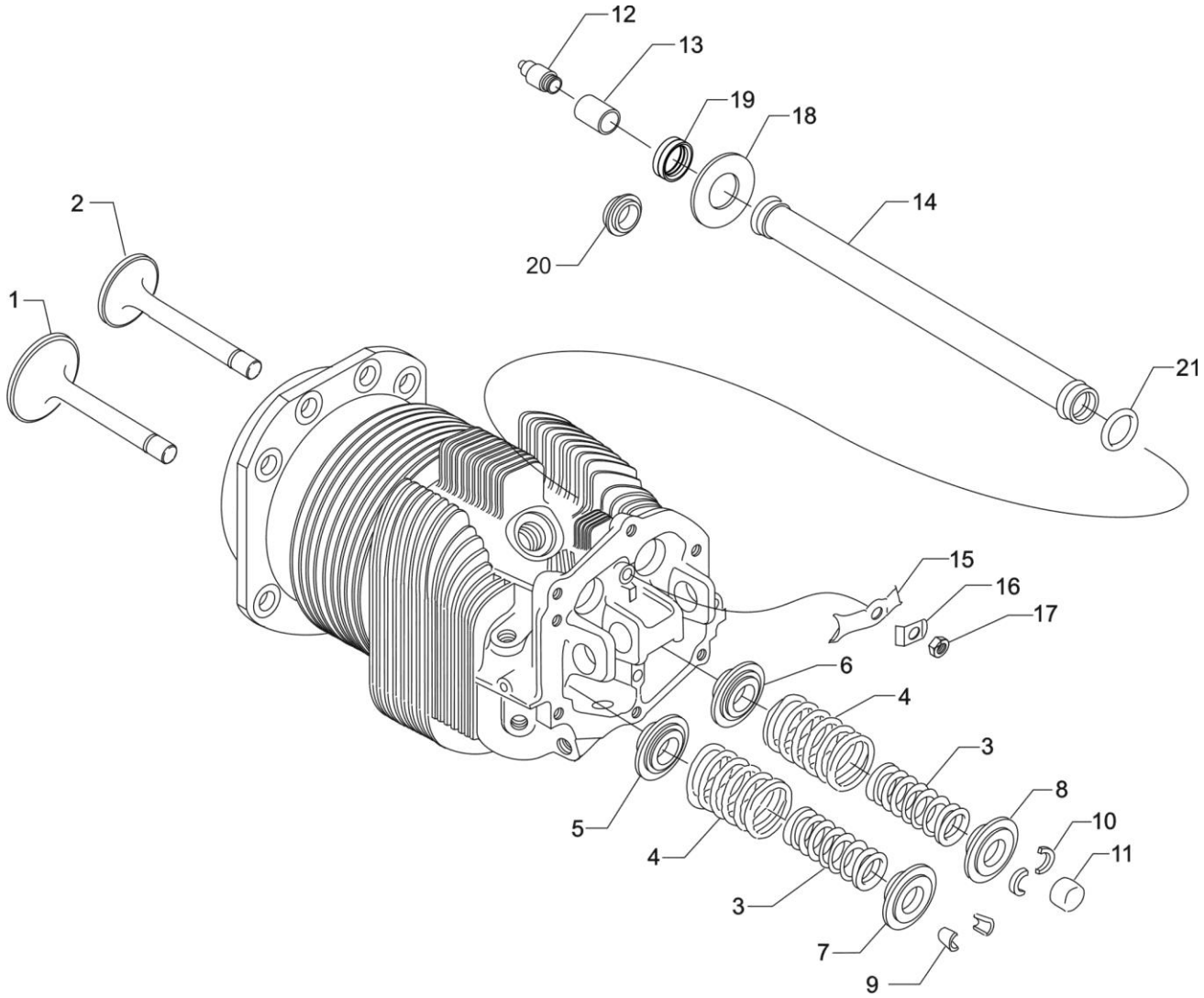

Figure 10
Valve Assembly and Related Parts

Effectivity: IO-360-L2A Engines
Copyright, Lycoming Engines
Lycoming Engines is a division of Avco Corporation

Cylinder Section

FIGURE 10 – VALVE ASSEMBLY AND RELATED PARTS

Figure Item	Code	Part Number	Description	Units per Assembly
1		17A23938	VALVE, Intake	4
2		17B23936	VALVE, Exhaust	4
3		17D29055	SPRING, Valve, inner	8
4		17D29060	SPRING, Valve, outer	8
5		65441	SEAT, Valve spring, lower intake	4
6		LW-13323	SEAT, Valve spring, lower exhaust	4
7		LW-10077	SEAT, Valve spring, upper intake	4
8		LW-16475	SEAT, Valve spring, upper exhaust (rotator type)	4
9		60009	KEY, Valve, intake	8
10		17C21191	KEY, Valve, exhaust (rotator type)	8
11		17C19386	CAP, Valve stem exhaust (rotator type)	4
12		15B26066	PLUNGER ASSEMBLY, Hydraulic lifter	8
13		15B21319	SOCKET, Hydraulic tappet	8
14		LW-11485	SHROUD TUBE ASSEMBLY, Push rod **(Flat tappet engines)**	8
		15G23461	SHROUD TUBE ASSEMBLY, Push rod **(Roller tappet engines)**	8
15		LW-14995	SPRING, Shroud tube	4
16		LW-12272	LOCKPLATE, Shroud tube	4
17		STD-1411	NUT, 1/4-20 plain	4
18		01L23459	WASHER, 25/32 I.D. x 3/8 O.D. x 1/32 thick **(Roller tappet engines)**	8
19	*	LW-18661	SEAL, Shroud tube **(Flat tappet engines)**	8
20		06A23493	SEAL, Shroud tube **(Roller tappet engines)**	8
21	**	70310	SEAL, Shroud tube	8

* This seal is used on flat tappet engines only.
** This seal is used on both flat tappet and roller tappet engines.

Copyright, Lycoming Engines

Lycoming Engines is a division of Avco Corporation

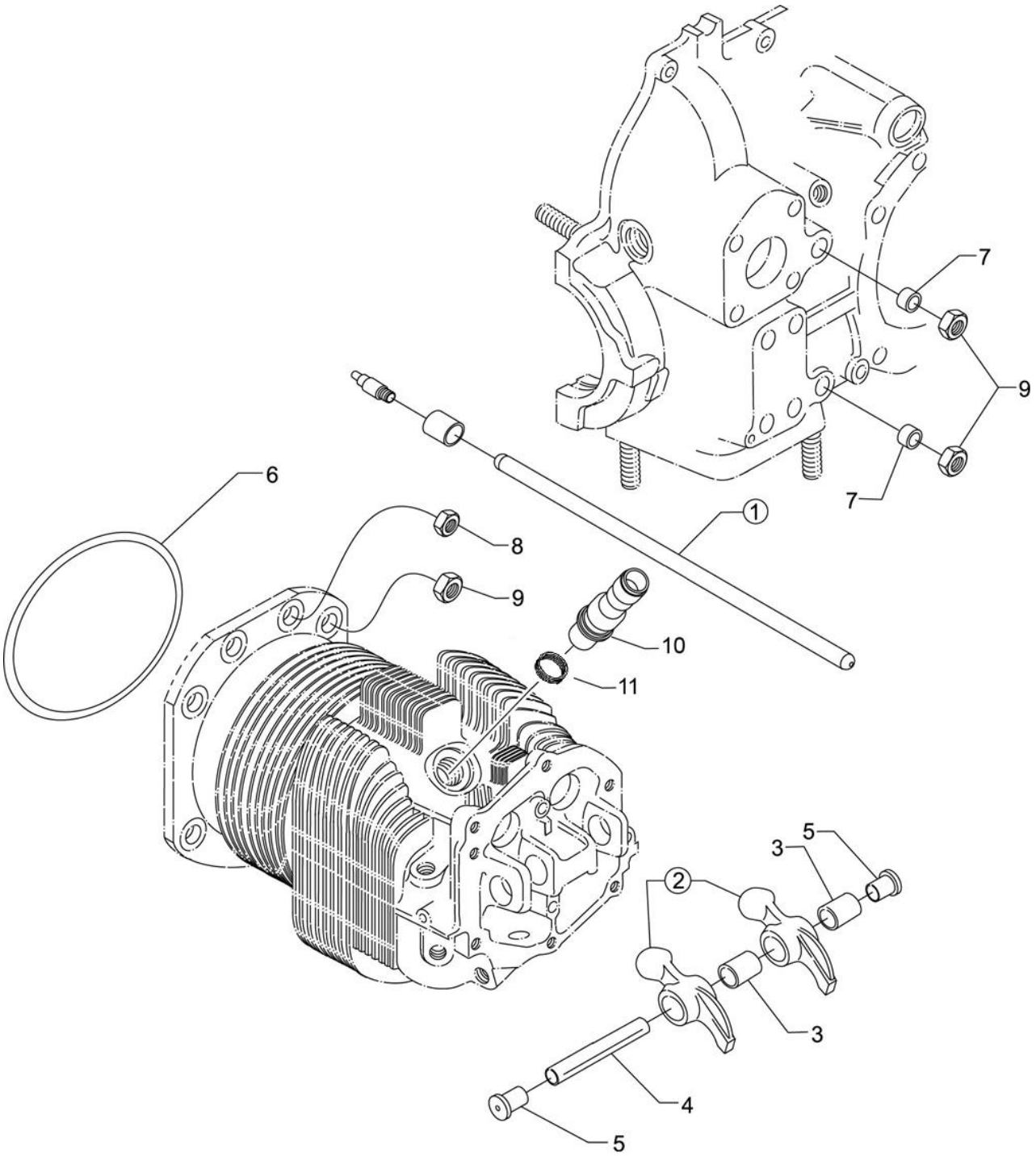

Figure 11
Cylinder Related Parts and Spark Plugs

Effectivity: IO-360-L2A Engines
Copyright, Lycoming Engines
Lycoming Engines is a division of Avco Corporation

Cylinder Section

FIGURE 11 – CYLINDER RELATED PARTS AND SPARK PLUGS

Figure Item	Code	Part Number	Description	Units per Assembly
1	*♦	15F28835-28	ROD ASSEMBLY, Push (A total of 8 required) **RT**	**AR**
	*♦	15F28835-29	ROD ASSEMBLY, Push (A total of 8 required) **RT**	**AR**
	*♦	15F28835-30	ROD ASSEMBLY, Push (A total of 8 required) **RT**	**AR**
	*♦	15F28835-31	ROD ASSEMBLY, Push (A total of 8 required) **RT**	**AR**
	*♦	15F28835-32	ROD ASSEMBLY, Push (A total of 8 required) **RT**	**AR**
	*♦	15F28835-33	ROD ASSEMBLY, Push (A total of 8 required) **RT**	**AR**
	†♦	15F28835-34	ROD ASSEMBLY, Push (A total of 8 required)	**AR**
	‡♦	15F28835-35	ROD ASSEMBLY, Push (A total of 8 required)	**AR**
	‡♦	15F28835-36	ROD ASSEMBLY, Push (A total of 8 required)	**AR**
	‡♦	15F28835-37	ROD ASSEMBLY, Push (A total of 8 required)	**AR**
2	**	17F19357	ROCKER ASSEMBLY, Valve	8
3		74637	BUSHING, Valve rocker	8
4		LW-13790	SHAFT, Valve rocker	4
5		LW-12892	THRUST BUTTON, Rocker shaft	8
6		71481	RING, Oil seal, 3/32 diameter x 4-27/32 long	4
7		74887	SPACER, 33/64 I.D. x 7/8 O.D. x 3/8 thick	2
8		383-B	NUT, 3/8-24 plain	16
9		STD-2090	NUT, 1/2-20 plain	18
10	**V#**	1182-E7	SPARK PLUG, Champion **V** REM38E	8
11		STD-295	GASKET, Spark Plug	8

AR as required
***** These push rods are not to be used on flat tappet engines.
† This push rod can be used on both flat tappet and roller tappet engines.
‡ These push rods are not to be used on roller tappet engines.
♦ See latest revision of Service Instruction No. 1060 for complete push rod application.
****** Due to the size of the area where the part number is stamped, the last five digits may be all that is shown (19357).
V Vendor Prime Manufacturer part
Item No. 1182-E7 spark plugs are used in current production only. Additional spark plugs are available for this engine. See latest revision of Lycoming Service Instruction No. 1042 for complete listing of all approved spark plugs.

NOTE: Various push rod lengths are used to set valve clearances.

Copyright, Lycoming Engines
Lycoming Engines is a division of Avco Corporation

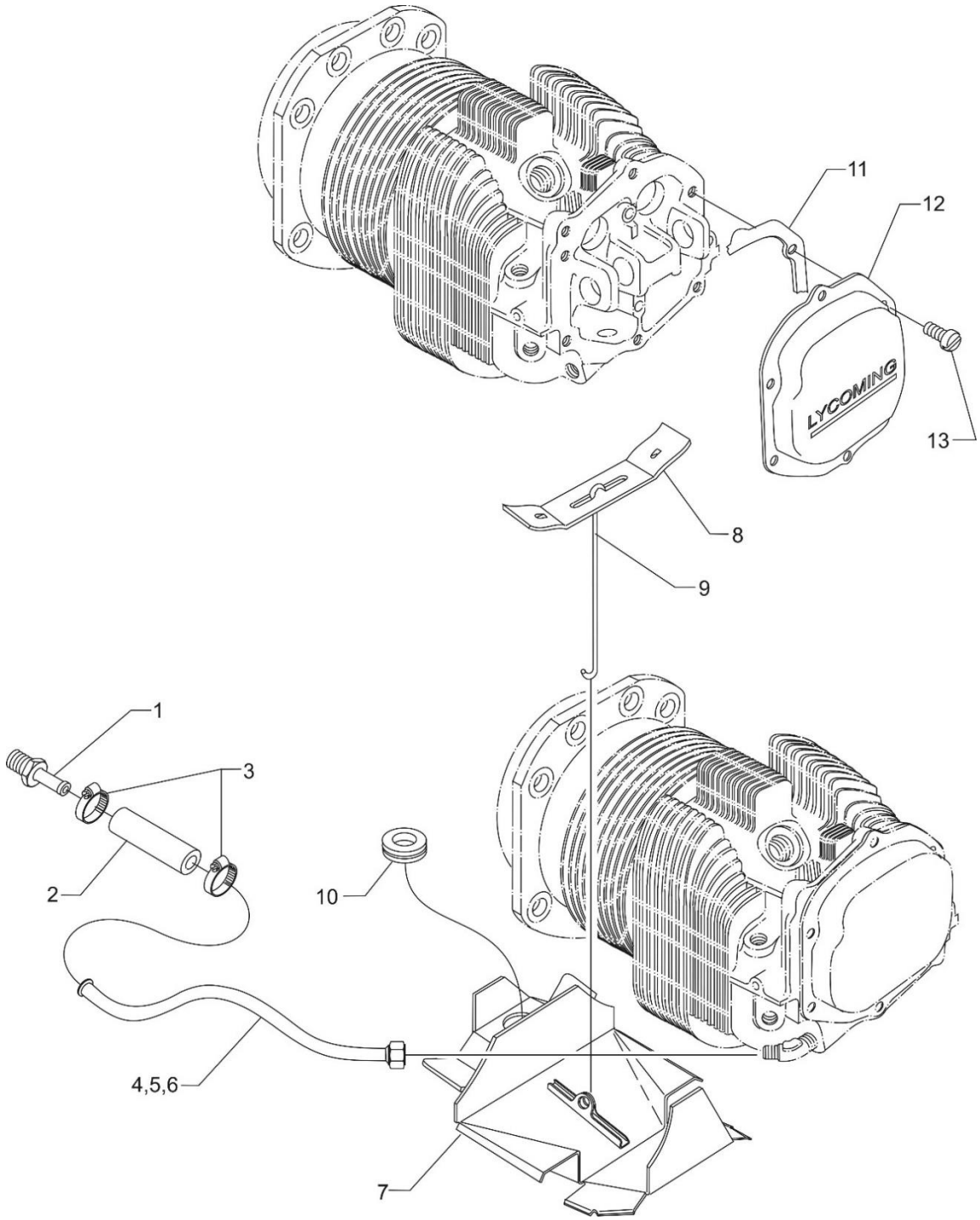

Figure 12
Cylinder Head Drain Tubes, Intercylinder Cooling Baffles and Rocker Box Covers

Effectivity: IO-360-L2A Engines
Copyright, Lycoming Engines
Lycoming Engines is a division of Avco Corporation

Cylinder Section

FIGURE 12 –CYLINDER HEAD DRAIN TUBES, INTERCYLINDER COOLING BAFFLES AND ROCKER BOX COVERS

Figure Item	Code	Part Number	Description	Units per Assembly
1		STD-684	NIPPLE, Straight, 3/8 I.D. hose	4
2		STD-1821	HOSE, 3/8 I.D. x 2-1/2 long	4
3		LW-15592-5-04	CLAMP, 7/16 O.D. Hose	8
4		68759	TUBE ASSEMBLY, Oil drain, cylinder no. 1	1
5		68760	TUBE ASSEMBLY, Oil drain, cylinder no. 2	1
6		68761	TUBE ASSEMBLY, Oil drain, cylinders no. 3 & 4	2
7	*	75339	BAFFLE ASSEMBLY, Intercylinder	1
	**	LW-13389	BAFFLE ASSEMBLY, Intercylinder	1
8		71611	RETAINER, Intercylinder baffle	2
9		71610	HOOK, Intercylinder baffle retainer	2
10		MS35489-20X	GROMMET	1
11		06B26669	GASKET, Rocker box cover (Silicone)	4
12		61247	COVER, Rocker box	4
		61247-C	COVER, Rocker box, chrome	4
13		STD-1925	SCREW, 1/4-20 x 5/8 long, pan. head, self-locking	24
	♦	01F22880	SCREW, 1/4-20 x 19/32 long, stainless	24
	♦	MS35335-33	WASHER	24

* Install on left side between no. 2 and no. 4 cylinders.
** Install on right side between no. 1 and no. 3 cylinders.
♦ Used with chrome rocker box cover.

Copyright, Lycoming Engines

Lycoming Engines is a division of Avco Corporation

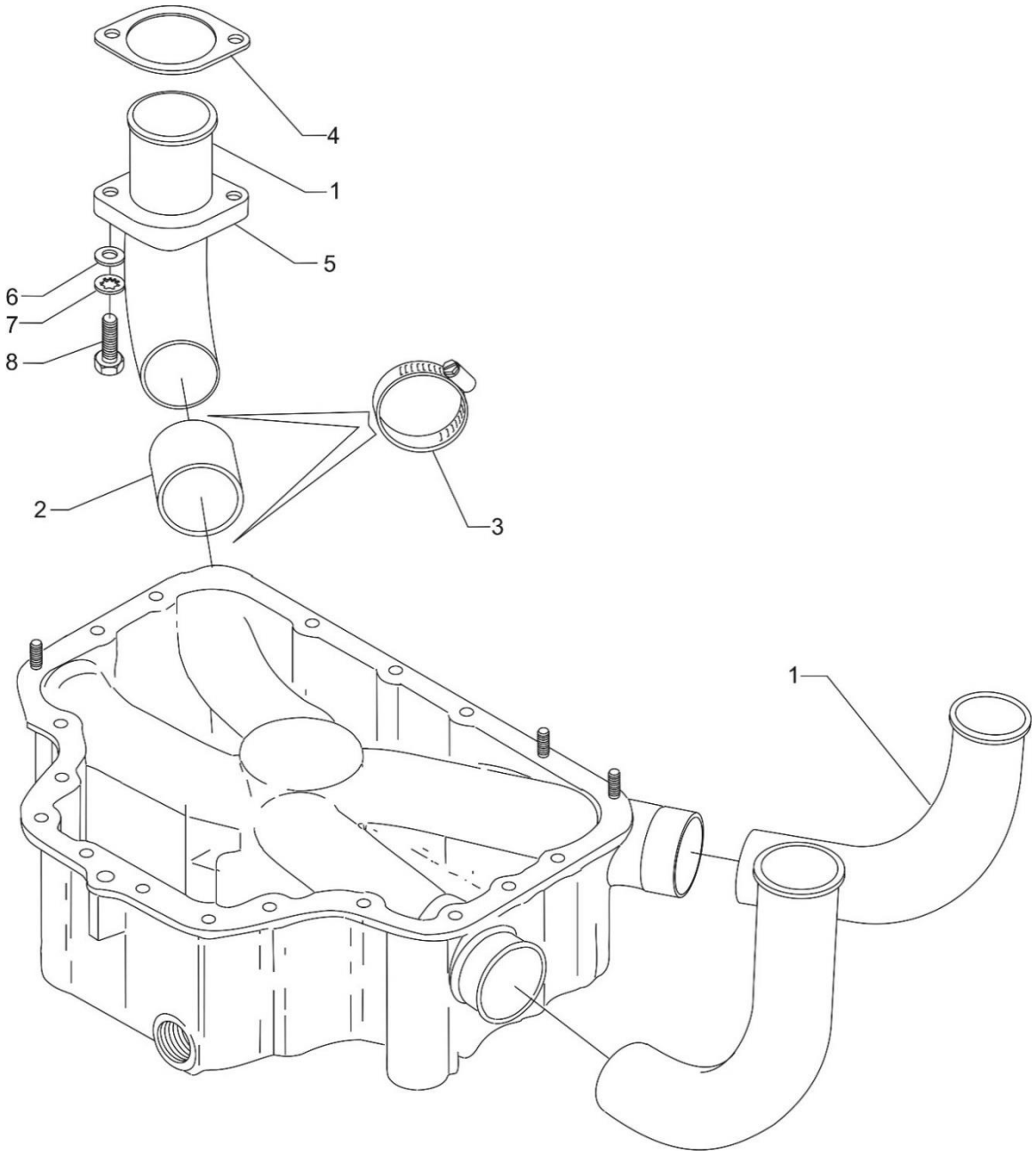

Figure 13
Intake Pipes and Attaching Parts

Effectivity: IO-360-L2A Engines
Copyright, Lycoming Engines
Lycoming Engines is a division of Avco Corporation

Cylinder Section

FIGURE 13 – INTAKE PIPES AND ATTACHING PARTS

Figure Item	Code	Part Number	Description	Units per Assembly
1		70485	PIPE, Intake	4
2		69603	HOSE, 1-3/4 I.D. x 2-3/16 O.D. x 1-3/4	4
3		LW-15592-8-28	CLAMP, Hose	8
4		71973	GASKET, 2 bolt flange, 1-3/4 I.D.`	4
5		73346	FLANGE, Intake pipe, upper	4
6		STD-8	WASHER, 1/4 plain	8
7		STD-160	WASHER, 1/4 lock, internal teeth	8
8		LW-25-1.25	BOLT, 1/4-20 x 1-1/4 long, hex. head	8

Copyright, Lycoming Engines

Lycoming Engines is a division of Avco Corporation

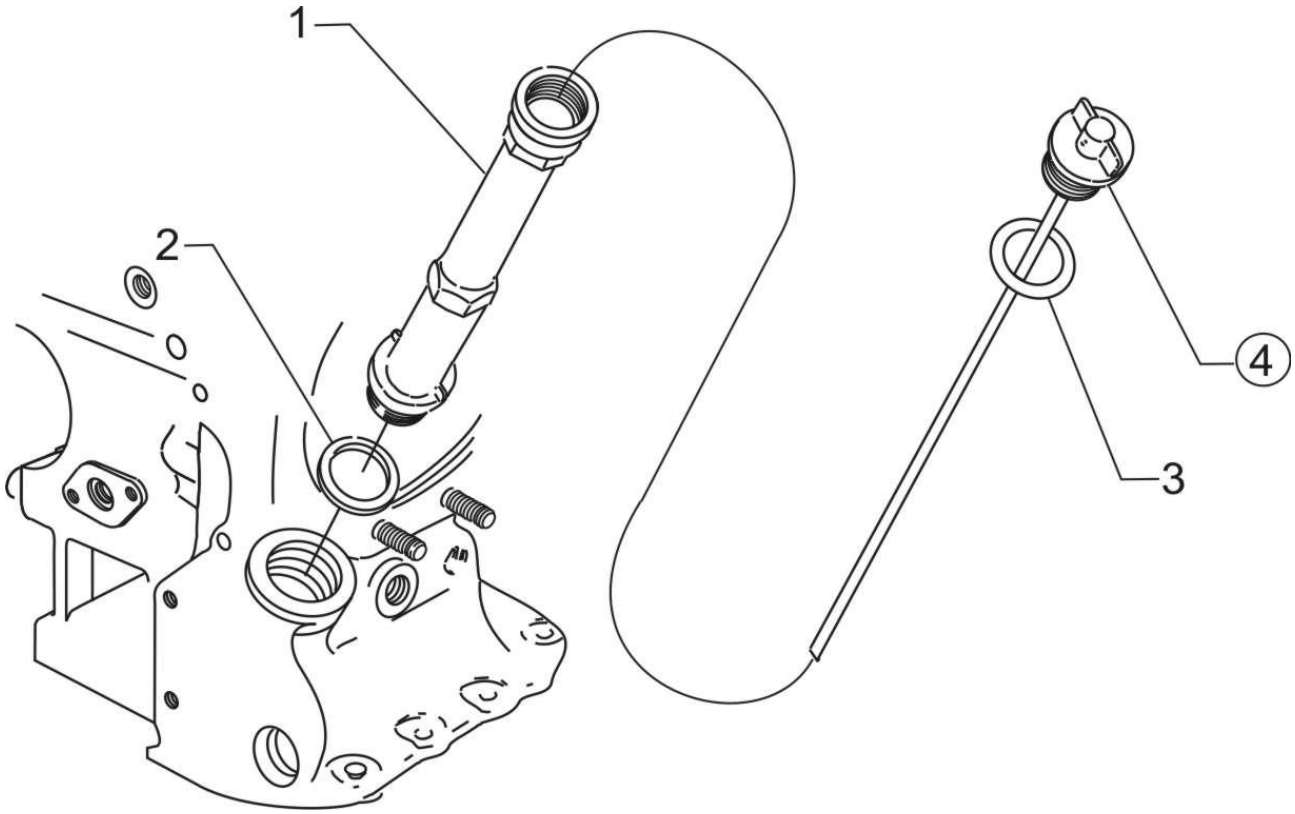

Figure 14
Oil Level Gage

Effectivity: IO-360-L2A Engines
Copyright, Lycoming Engines
Lycoming Engines is a division of Avco Corporation

Lubrication System

FIGURE 14 – OIL LEVEL GAGE

Figure Item	Code	Part Number	Description	Units per Assembly
1		56C23075	TUBE, Oil level gage, long	1
2		72059	GASKET, Oil level gage	1
3		74065	RING, Oil level gage seal	1
4		LW-14768	GAGE ASSEMBLY, Oil level	1

Copyright, Lycoming Engines

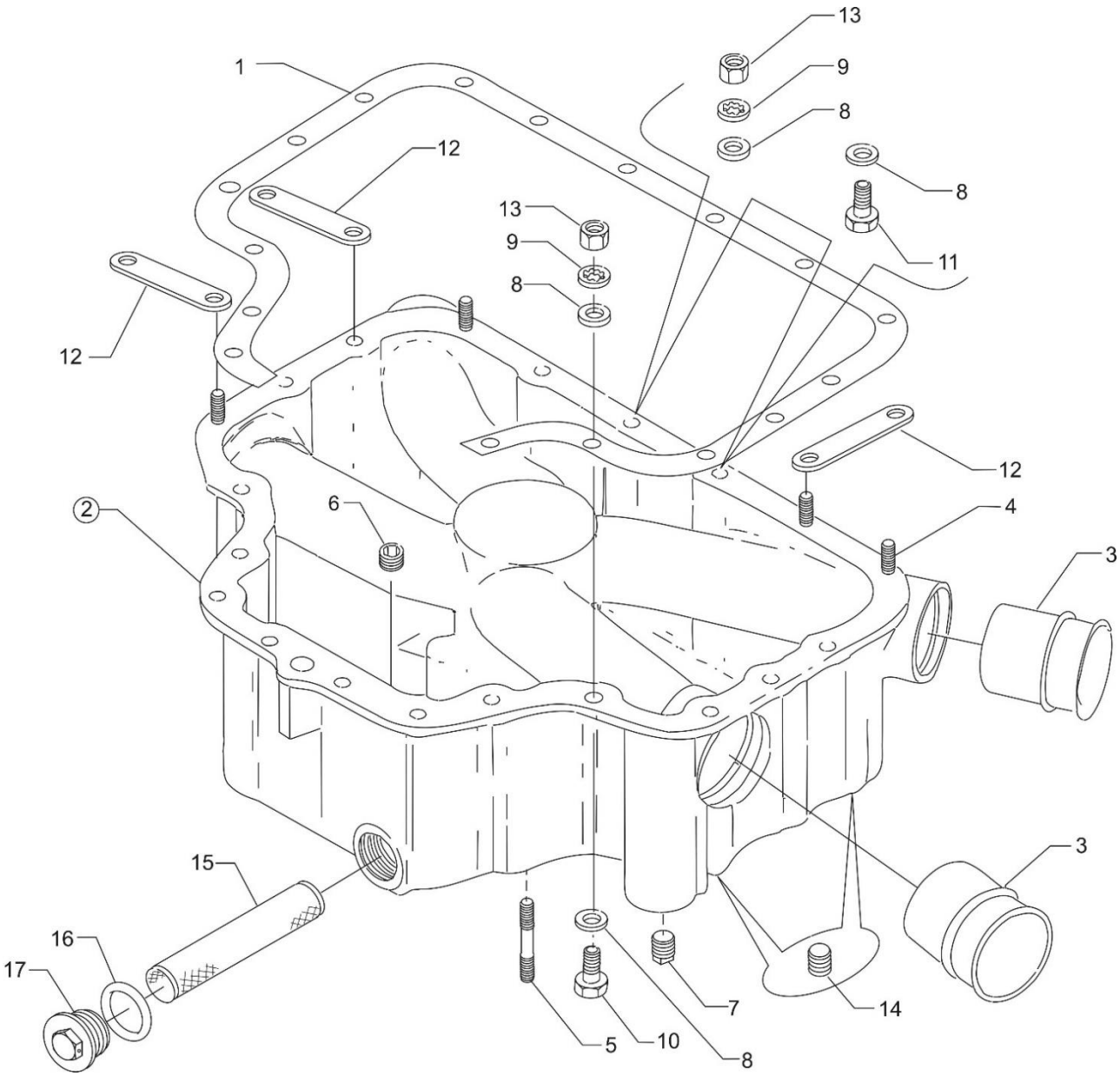

Figure 15
Oil Sump Assembly and Oil Suction Screen

Effectivity: IO-360-L2A Engines
Copyright, Lycoming Engines
Lycoming Engines is a division of Avco Corporation

Lubrication System

FIGURE 15 – OIL SUMP ASSEMBLY AND OIL SUCTION SCREEN

Figure Item	Code	Part Number	Description	Units per Assembly
1		LW-13353	GASKET, Oil sump	1
2		LW-13861	SUMP ASSEMBLY, Oil	1
3		78914	CONNECTION, Intake pipe	4
4		25C-10	STUD, 1/4-20 x 1-1/4 long	4
5		31C-17	STUD, 5/16-18 x 2-1/8 long	4
6		STD-91	PLUG, 1/2-14 NPT, allen head	1
7		STD-551	PLUG, 1/2-14 NPT, square head	2
8		STD-8	WASHER, 1/4 plain	28
9		STD-160	WASHER, 1/4 lock, internal teeth	20
10		LW-25-0.94	BOLT, 1/4-20 x 15/16 long, hex. head	13
11		LW-25-1.13	BOLT, 1/4-20 x 1-1/8 long, hex. head	3
12		73152	BRACKET, Support clamp	3
13		STD-1411	NUT, 1/4-20 plain	12
14		STD-2229	PLUG, 1/2 NPT, allen head	2
15		70484	SCREEN, Oil suction	1
16		06E19769-1.00	GASKET, Annular, 1.00 I.D.	1
17		LW-12545	PLUG, 5/8 hex. head x 1.00-20	1

Copyright, Lycoming Engines

Lycoming Engines is a division of Avco Corporation

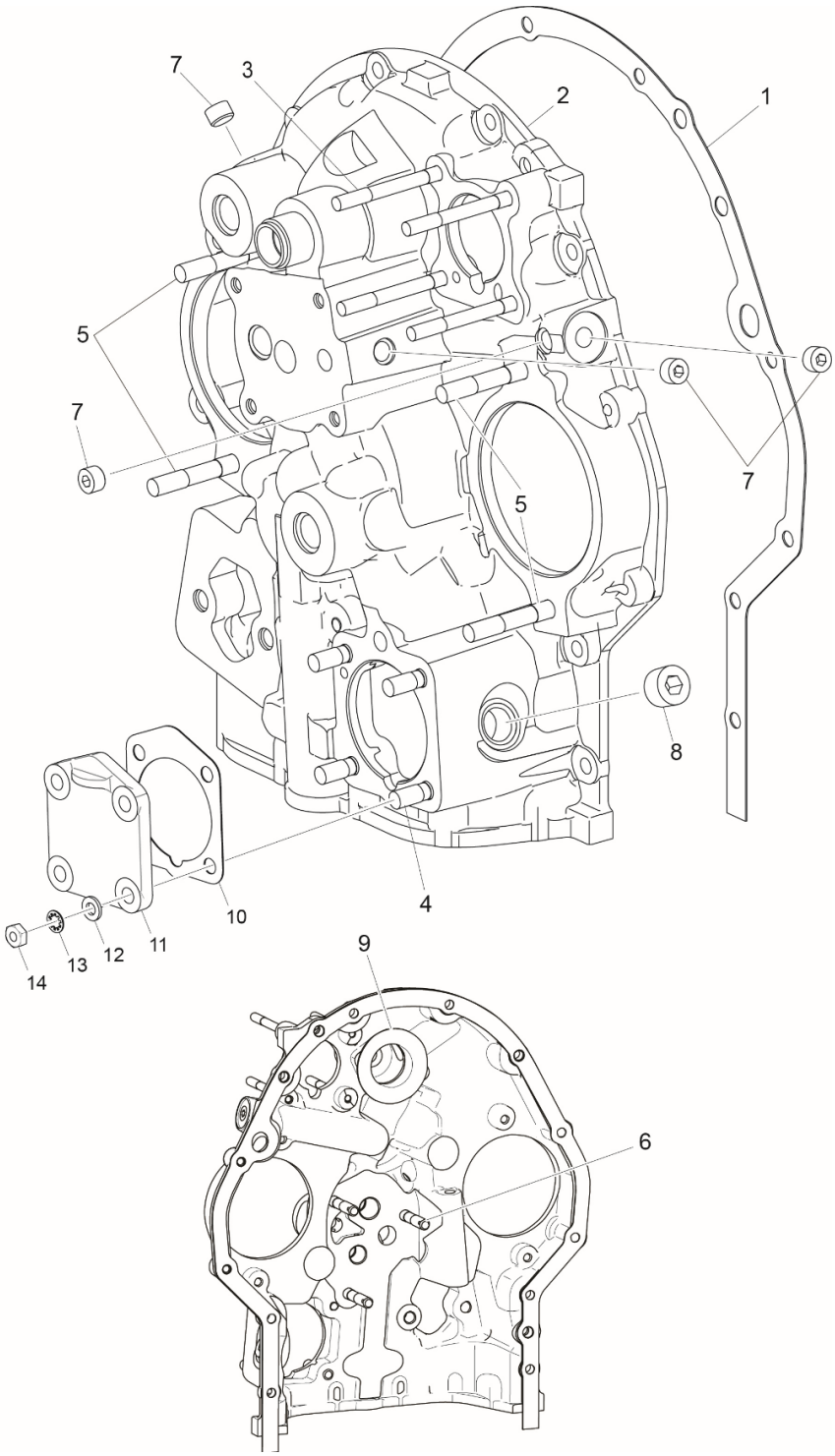

Figure 16
Accessory Housing Assembly

Copyright, Lycoming Engines
Lycoming Engines is a division of Avco Corporation

Accessory Drives

FIGURE 16 – ACCESSORY HOUSING ASSEMBLY

Figure Item	Code	Part Number	Description	Units per Assembly
1		73818	GASKET, Accessory housing	1
2		21A21533-05	HOUSING ASSEMBLY, Accessory	1
3		25C-22	STUD, 1/4-20 x 2-3/4 long	4
4		31C-12	STUD, 5/16-18 x 1-1/2 long	4
5		31C-19	STUD, 5/16-18 x 2-1/8 long	4
6		31CD-17	STUD, 5/16-18 x 2-1/8 long, drilled	3
7		1102	PLUG, 1/8-27 NPT, allen head	4
8		STD-784	PLUG, 3/8-18 NPT, allen head	1
9		76119	SHIELD, Accessory breather oil	1
10		69551	GASKET, Accessory drive adapter	1
11		69106	COVER, Governor drive adapter pad	1
12		STD-35	WASHER, 5/16 plain	4
13		STD-475	WASHER, 5/16 lock, internal teeth	4
14		STD-1410	NUT, 5/16-18 plain	4

Copyright, Lycoming Engines

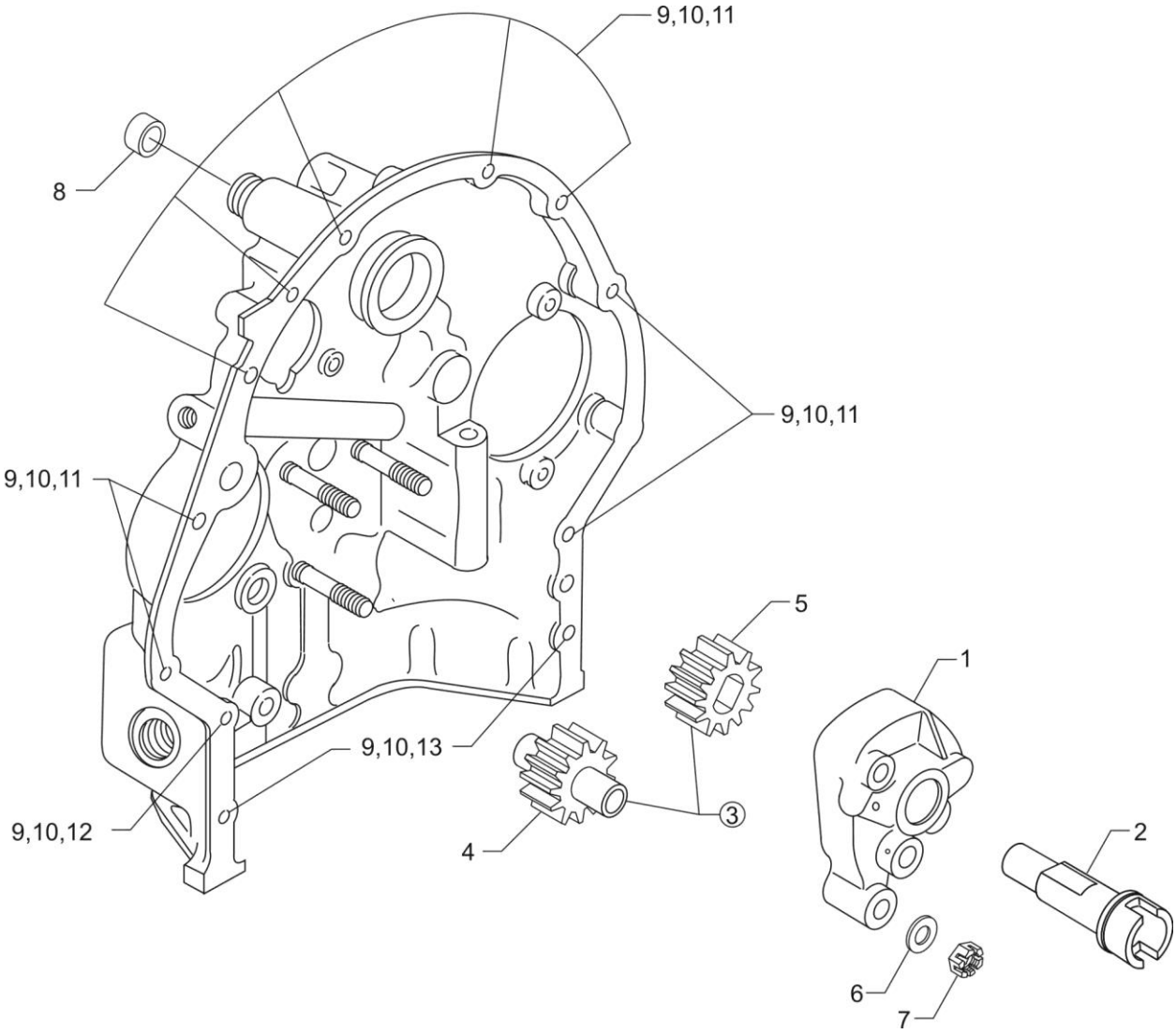

Figure 17
Oil Pump Assembly and Accessory Housing Attaching Parts

Effectivity: IO-360-L2A Engines
Copyright, Lycoming Engines
Lycoming Engines is a division of Avco Corporation

Accessory Drives

FIGURE 17 – OIL PUMP ASSEMBLY AND ACCESSORY HOUSING ATTACHING PARTS

Figure Item	Code	Part Number	Description	Units per Assembly
1		78531	BODY ASSEMBLY, Oil pump	1
2		61174	SHAFT, Oil pump drive	1
3		05K19423-S	IMPELLER KIT	1
4	*	LW-18110	IMPELLER ASSEMBLY, Oil pump driven	1
5	*	LW-18109	IMPELLER, Oil pump driven	1
6		STD-35	WASHER, 5/16 plain	3
7		STD-1420	NUT, 5/16-18 slotted	3
8		LW-14260	SEAL, Oil, tachometer drive	1
9		STD-8	WASHER, 1/4 plain	12
10		STD-160	WASHER, 1/4 lock, internal teeth	12
11		LW-25-0.94	BOLT, 1/4-20 x 15/16 long, hex. head	9
12		LW-25-1.13	BOLT, 1/4-20 x 1-1/8 long, hex. head	1
13		LW-25-1.44	BOLT, 1/4-20 x 1-7/16 long, hex. head	2

* Sold in complete sets only (Kit P/N 05K19423-S).

Copyright, Lycoming Engines

Lycoming Engines is a division of Avco Corporation

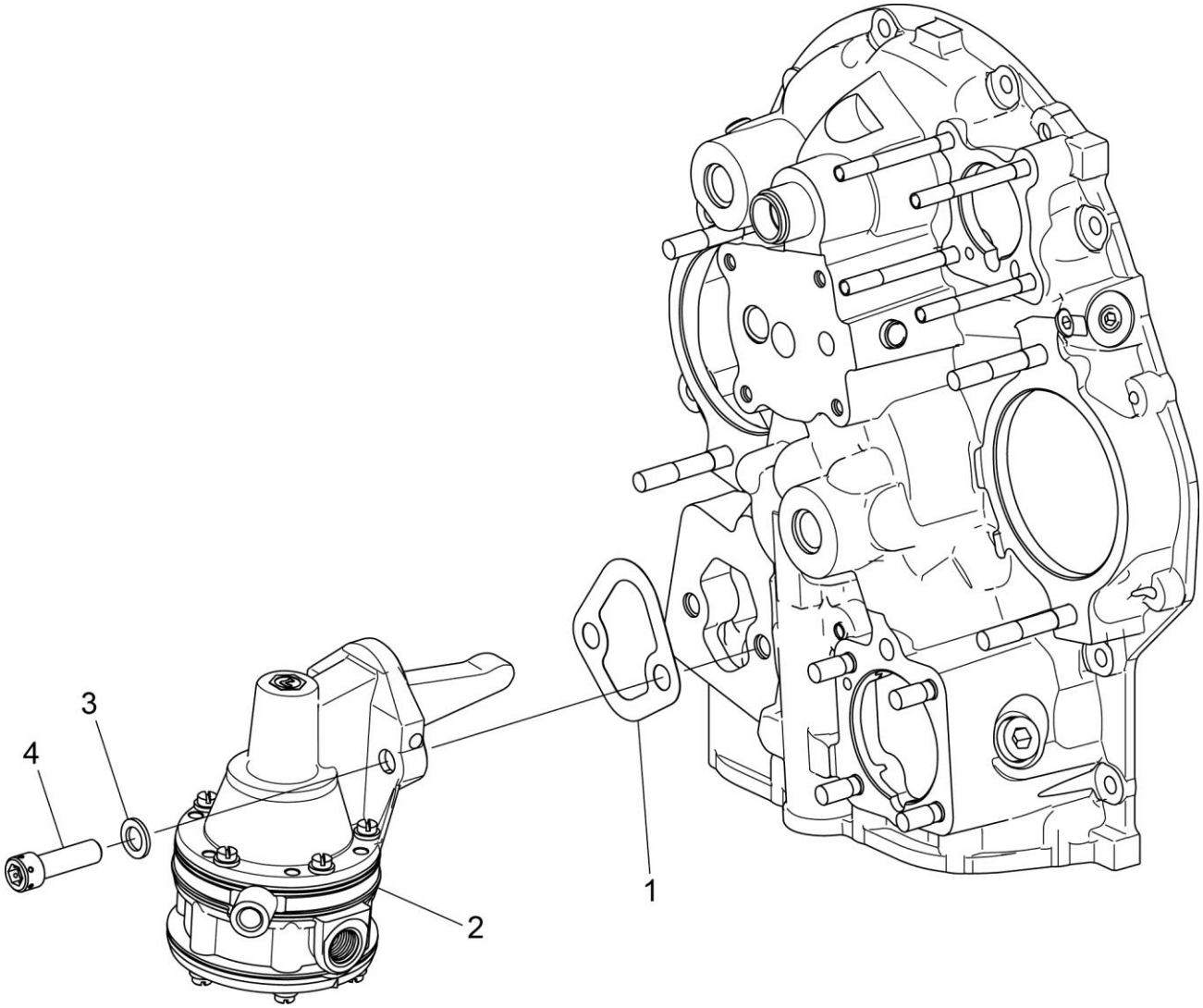

Figure 18
Fuel Pump Assembly and Attaching Parts

Effectivity: IO-360-L2A Engines
Copyright, Lycoming Engines
Lycoming Engines is a division of Avco Corporation

Accessory Drives

FIGURE 18 – FUEL PUMP ASSEMBLY AND ATTACHING PARTS

Figure Item	Code	Part Number	Description	Units per Assembly
1		60096	GASKET, Fuel pump	1
2		62B26931	FUEL PUMP, High pressure	1
3		STD-33	WASHER, 3/8 plain	2
4		STD-1882	SCREW, 3/8-16 x 1-9/32 long, socket head, drilled	2

Copyright, Lycoming Engines

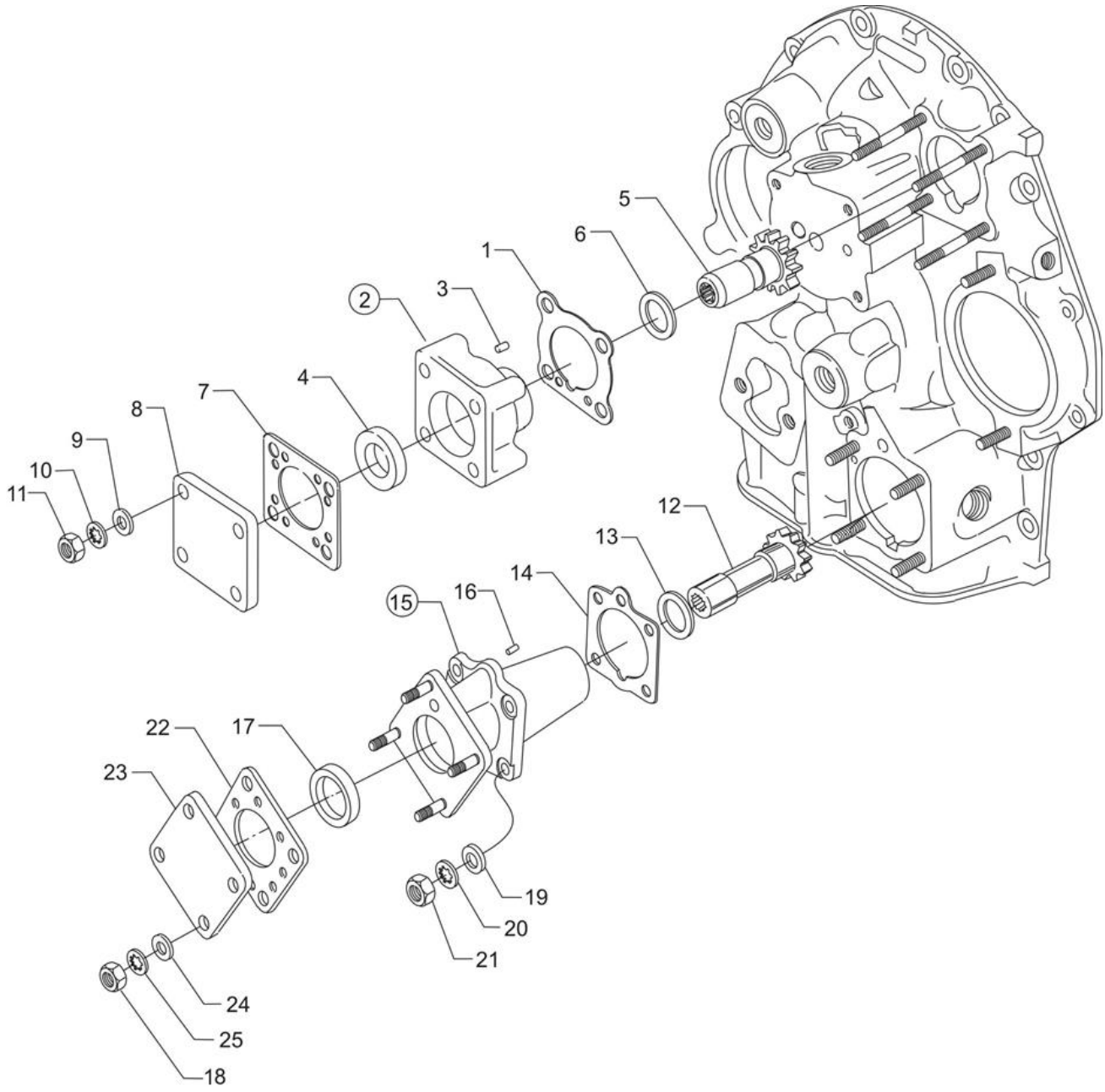

Figure 19
Vacuum and Hydraulic Pump Drives and Covers,
Propeller Governor Drive Cover

Effectivity: IO-360-L2A Engines
Copyright, Lycoming Engines
Lycoming Engines is a division of Avco Corporation

Accessory Drives

FIGURE 19 – VACUUM AND HYDRAULIC PUMP DRIVES AND COVERS, PROPELLER GOVERNOR DRIVE COVER

Figure Item	Code	Part Number	Description	Units per Assembly
1		61183	GASKET, Accessory adapter	1
2		28F21254	ADAPTER ASSEMBLY, Vacuum pump	1
3		STD-1774	PIN, 1/8 diameter x 1/4 long	1
4		06A19956	OIL SEAL, 7/8 I.D. x 1-1/2 O.D. x 5/16	1
5		72970	GEAR ASSEMBLY, Vacuum pump driven	1
6		71596	WASHER, Accessory drive gear	1
7		8313	GASKET, Vacuum pump	1
8		60430	COVER, Vacuum pump	1
9		STD-8	WASHER, 1/4 plain	4
10		STD-160	WASHER, 1/4 lock, internal teeth	4
11		STD-1411	NUT, 1/4-20 plain	4
12		27A22099	GEAR ASSEMBLY, Hydraulic pump driven	1
13		71596	WASHER, Accessory drive gear	1
14		68315	GASKET, Accessory drive adapter	1
15		27D21252	ADAPTER ASSEMBLY, Hydraulic pump	1
16		STD-1774	PIN, 1/8 diameter x 1/4 long	1
17		06A19956	OIL SEAL, 7/8 I.D. x 1-1/2 O.D. x 5/16 wide	1
18		STD-1411	NUT, 1/4-20 plain	4
19		STD-35	WASHER, 5/16 plain	4
20		STD-475	WASHER, 5/16 lock, internal teeth	4
21		STD-1410	NUT, 5/16-18 plain	4
22		8313	GASKET, Hydraulic pump	1
23		60430	COVER, Hydraulic pump	1
24		STD-8	WASHER, 1/4 plain	4
25		STD-160	WASHER, 1/4 lock, internal teeth	4

Copyright, Lycoming Engines

Lycoming Engines is a division of Avco Corporation

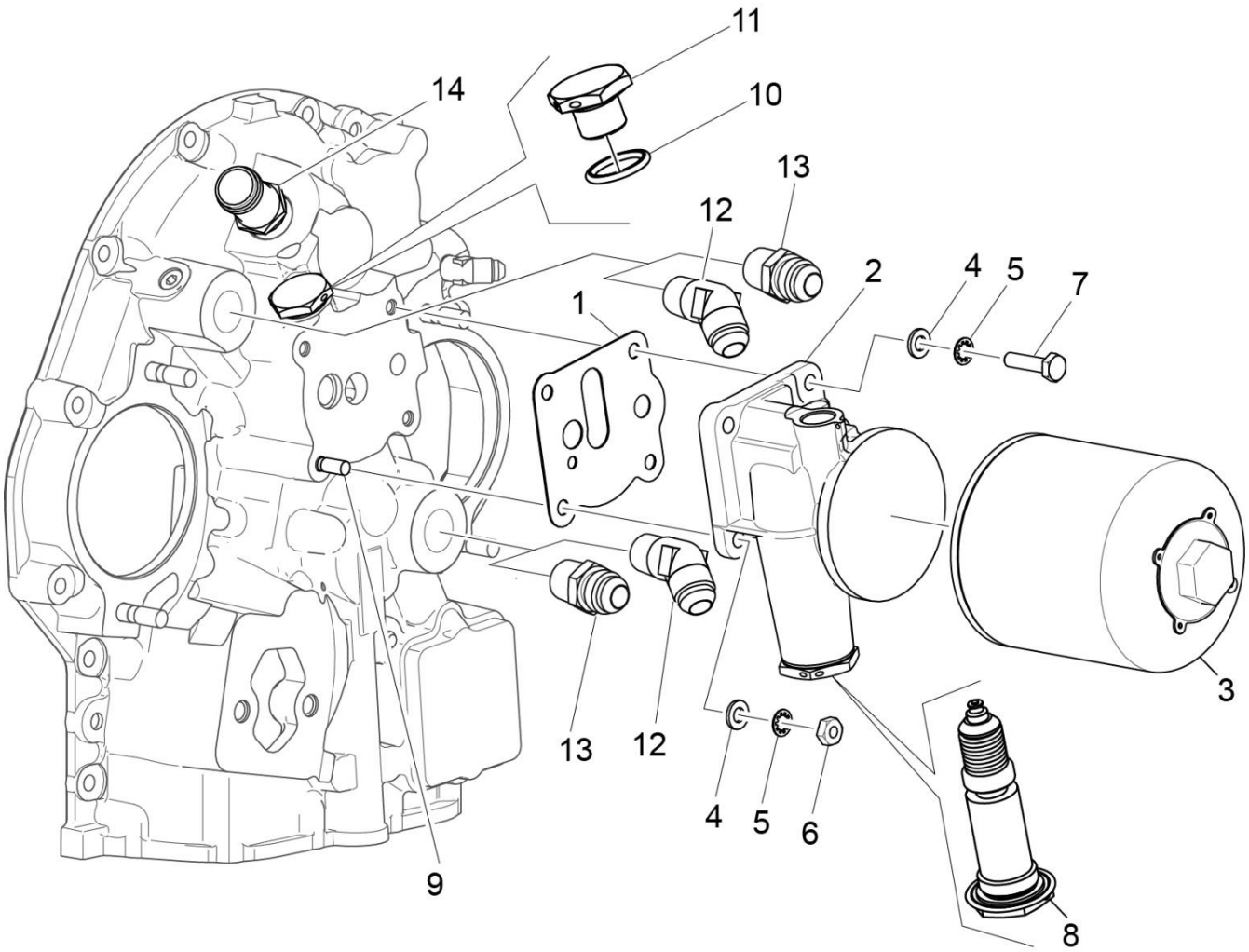

Figure 20
Oil Filter Assembly, Oil Cooler Bypass Valve and Breather Fitting

Effectivity: IO-360-L2A Engines
Copyright, Lycoming Engines
Lycoming Engines is a division of Avco Corporation

Accessory Drives

FIGURE 20 – OIL FILTER ASSEMBLY, OIL COOLER BYPASS VALVE AND BREATHER FITTING

Figure Item	Code	Part Number	Description	Units per Assembly
1		06B23862	GASKET, Oil filter adapter	1
2		77852	OIL FILTER BASE ASSEMBLY	1
3		LW-13215	OIL FILTER, Short	1
4		STD-8	WASHER, 1/4 plain	4
5		STD-160	WASHER, 1/4 lock, internal teeth	4
6		STD-1411	NUT, 1/4-20 plain	1
7		LW-25-1.00	BOLT, 1/4-20 x 1.00 long, hex. head	3
8		53E22144	VALVE ASSEMBLY, Temperature control oil cooler bypass with gasket	1
9		25C-10	STUD, 1/4-20 x 1-1/4 long	1
10		06E19769-0.63	GASKET, Annular, 5/8 I.D.	1
11		62417	PLUG, Oil cooler bypass	1
*12		MS20823-8	ELBOW, 3/8 NPT, 1/2 flared tube	1
*13		AN816-8	NIPPLE, 1/2 flared tube	1
14		71140	FITTING, Breather	2

NOTE: Refer to latest revision of Lycoming SSP-885 for oil filter kits and replacement filters.

* Some configurations of the IO-360-L2A will have the elbow P/N MS20823-8 installed in the upper oil cooler boss and the nipple P/N AN816-8 installed in the lower oil cooler boss. Other configurations will have the nipple P/N AN816-8 installed in the upper oil cooler boss and the elbow P/N MS20823-8 installed in the lower oil cooler boss

Copyright, Lycoming Engines

Lycoming Engines is a division of Avco Corporation

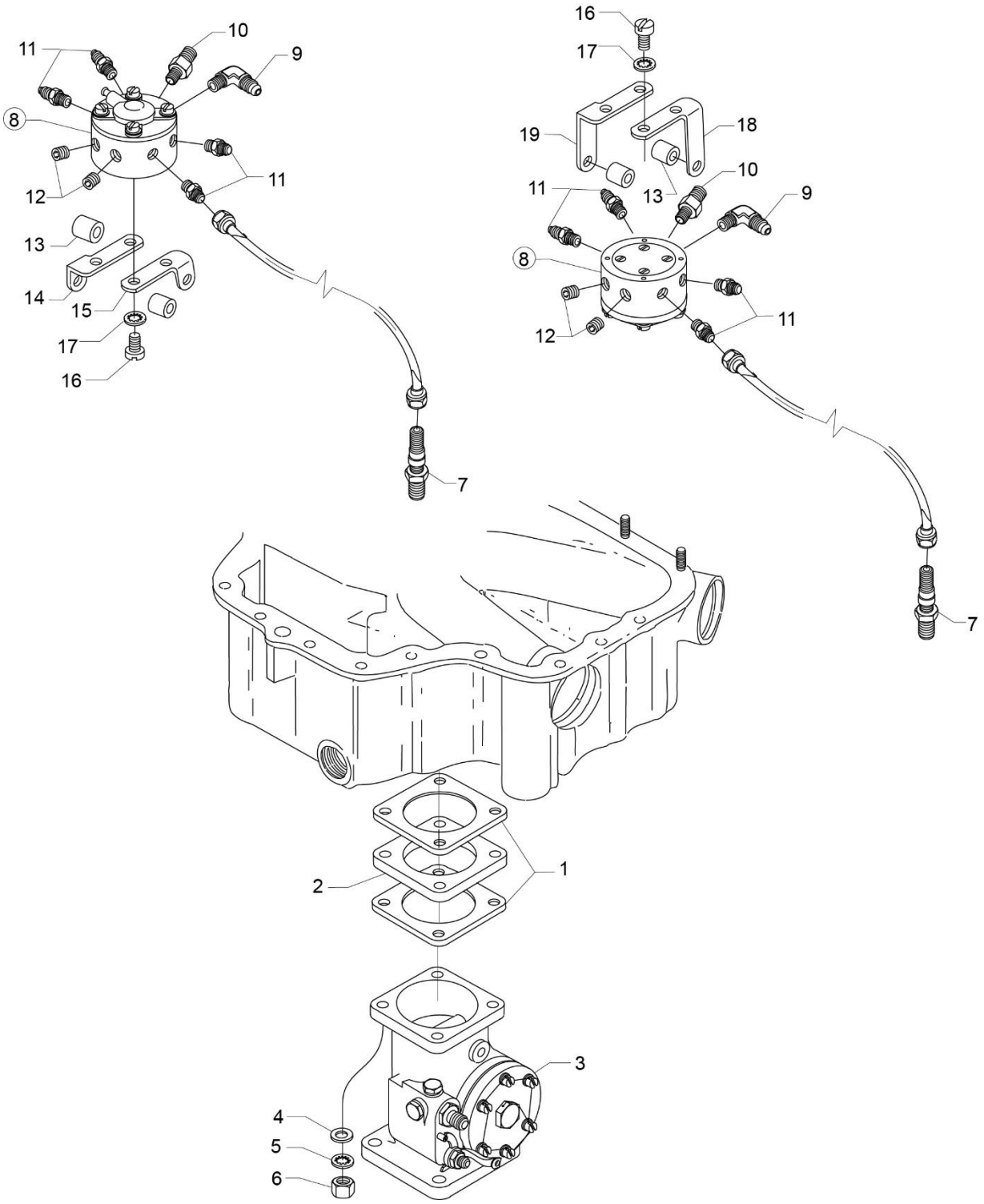

Figure 21
Fuel Injector, Fuel Manifold and Brackets

Effectivity: IO-360-L2A Engines
Copyright, Lycoming Engines
Lycoming Engines is a division of Avco Corporation

Fuel Distribution

FIGURE 21 – FUEL INJECTOR, FUEL MANIFOLD AND BRACKETS

Figure Item	Code	Part Number	Description	Units per Assembly
1		66224	GASKET, Fuel injector	2
2		73161	SPACER, Fuel injector	1
3	**V ***	61J26428	FUEL INJECTOR, RSA-5AD1, **V** AV 2576536-2	1
4		STD-35	WASHER, 5/16 plain	4
5		STD-475	WASHER, 5/16 lock, internal teeth	4
6		STD-1410	NUT, 5/16-18 plain	4
7		63C26450	NOZZLE, Injection	4
8		63B26449	MANIFOLD ASSEMBLY, Fuel	1
		63B22997	MANIFOLD ASSEMBLY, Fuel	1
		63B26706	MANIFOLD ASSEMBLY, Fuel	1
		63B26716	MANIFOLD ASSEMBLY, Fuel	1
		63B26756	MANIFOLD ASSEMBLY, Fuel	1
		63B26715	MANIFOLD ASSEMBLY, Fuel	1
9		MS20822-4	ELBOW, 1/4 tube, 1/8 NPT, 90º	1
10		02G21382	NIPPLE, Nozzle pressure gage	1 or 0
11		STD-148	NIPPLE, Union, 1/8 NPT	4
12		1102	PLUG, 1/8-27 NPT, allen head	2 or 3
13		73966	SPACER, Fuel manifold	2
14		07A23031	BRACKET, Fuel manifold	1
15		07A23032	BRACKET, Fuel manifold	1
16		STD-82	SCREW, No. 10-24 x 1/2 long, fill. Head	4
17		STD-251	WASHER, No. 10 lock, internal teeth	4
18	******	07A22995	BRACKET, Fuel manifold	1
19	******	07A22996	BRACKET, Fuel manifold	1

V Vendor Prime Manufacturer part

***** Refer to SI 1532 for a list of approved alternate Fuel Injectors.

****** Use brackets 07A22995 and 07A22996 for inverted fuel manifold. Refer to the latest revision of Service Instruction No. 1502 for additional details.

Copyright, Lycoming Engines

Lycoming Engines is a division of Avco Corporation

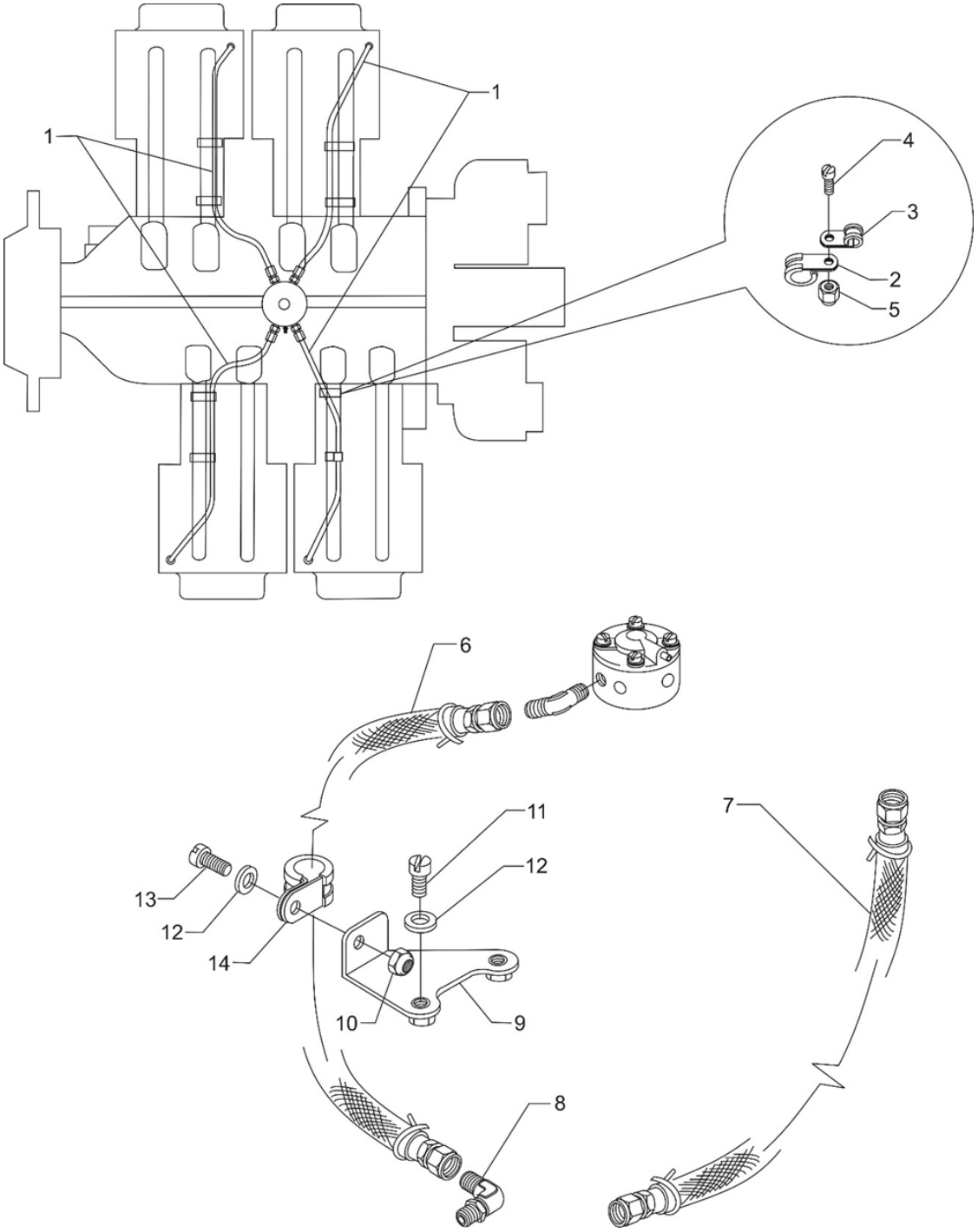

Figure 22
Fuel Lines, Fuel Hoses and Attaching Parts

Effectivity: IO-360-L2A Engines
Copyright, Lycoming Engines
Lycoming Engines is a division of Avco Corporation

Fuel Distribution

FIGURE 22 - FUEL LINES, FUEL HOSES AND ATTACHING PARTS

Figure Item	Code	Part Number	Description	Units per Assembly
1		LW-12098-0-180	TUBE ASSEMBLY, Fuel manifold to nozzle	4
2		LW-16266-10-75	CLAMP	8
3		LW-16266-10-13	CLAMP, 1/8 diameter for no. 10 screw	8
4		STD-860	SCREW, No. 10-32 x 5/8 long, fill. head	8
5		STD-670	LOCKNUT, No. 10-32	8
6		LW-12798-4S370	HOSE ASSEMBLY, 1/4 hose, straight	1
7		LW-12799-6S180	HOSE ASSEMBLY, 3/8 hose, straight	1
8		72377	ELBOW, 3/8 flared tube, adjustable	1
9		07A28507	BRACKET ASSEMBLY, Fuel line support	1
10		STD-670	LOCKNUT, No. 10-32	1
11		STD-692	SCREW, No. 10-32 x 1/2 long, round head	2
12		STD-425	WASHER, No. 10 plain	3
13		STD-860	SCREW, No. 10-32 x 5/8 long, fill head	1
14		LW-16266-10-63	CLAMP	1

Copyright, Lycoming Engines

Lycoming Engines is a division of Avco Corporation

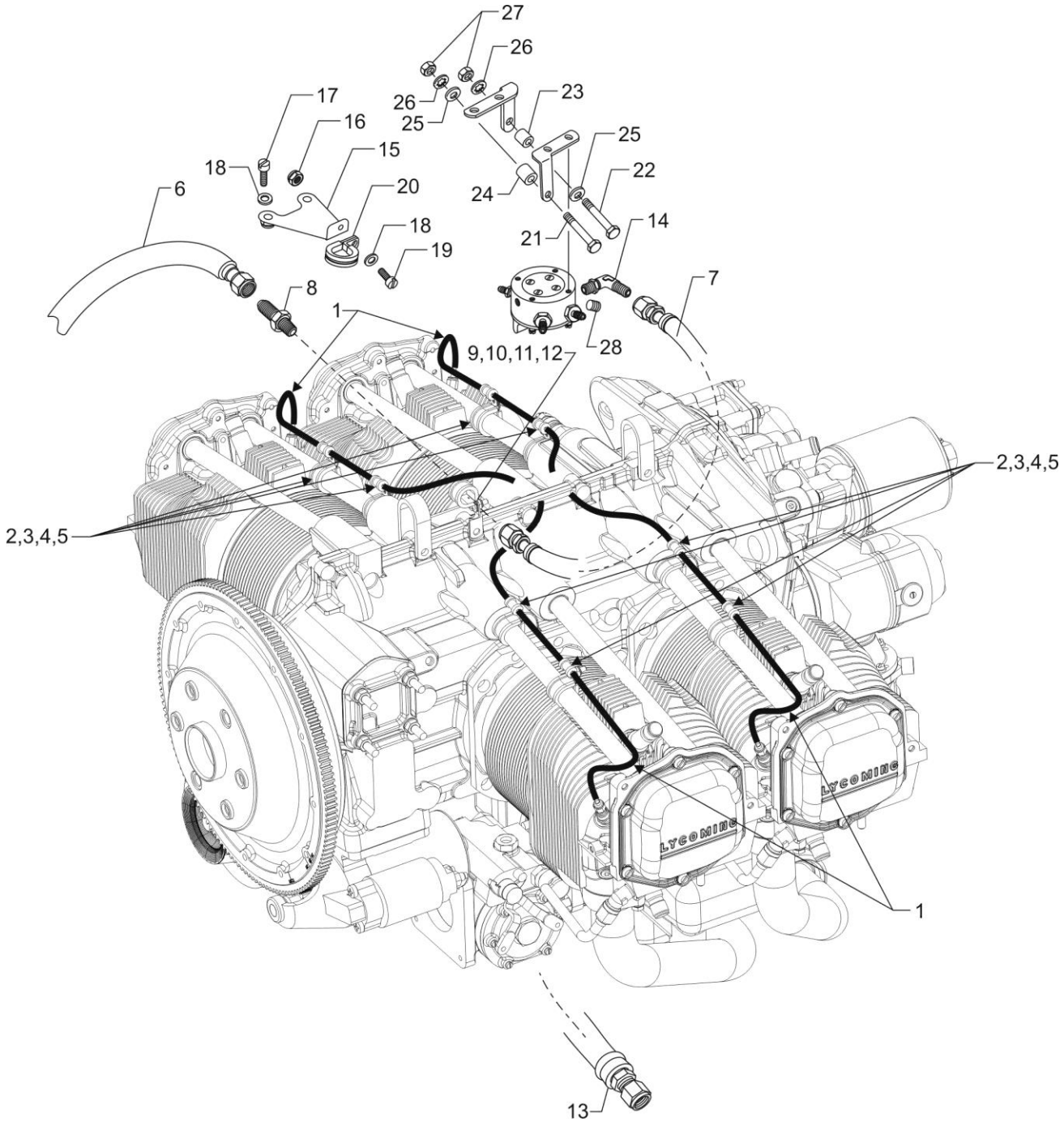

Figure 23
Fuel Lines, Fuel Hoses and Attaching Parts (Inverted Manifold)

Effectivity: IO-360-L2A Engines
Copyright, Lycoming Engines
Lycoming Engines is a division of Avco Corporation

Fuel Distribution

FIGURE 23 - FUEL LINES, FUEL HOSES AND ATTACHING PARTS (INVERTED MANIFOLD)

Figure Item	Code	Part Number	Description	Units per Assembly
1		LW-12098-0-180	TUBE ASSEMBLY, Fuel manifold to nozzle	4
2		LW-16266-10-75	CLAMP	8
3		LW-16266-10-13	CLAMP, 1/8 diameter for no. 10 screw	8
4		STD-860	SCREW, No. 10-32 x 5/8 long, fill. head	8
5		STD-670	LOCKNUT, No. 10-32	8
6		LW-12798-4S370	HOSE ASSEMBLY, 1/4 hose, straight	1
7		LW-12798-4S172	HOSE ASSEMBLY, 1/4 hose, straight	1
8		AN815-4	UNION, 1/4 flared tube	1
9		72815	BRACKET, Support clamp, 90º	1
10		STD-860	SCREW, No. 10-32 x 5/8 long, fill. head	1
11		STD-670	LOCKNUT, No. 10-32	1
12		LW-16266-10-63	CLAMP, 5/8 I.D. x no. 10 screw	1
13		LW-12799-6S180	HOSE ASSEMBLY, 3/8 hose, straight	1
14		72377	ELBOW, 3/8 flared tube, adjustable	1
15		07A28507	BRACKET ASSEMBLY, Fuel line support	1
16		STD-670	LOCKNUT, No. 10-32	1
17		STD-692	SCREW, No. 10-32 x 1/2 long, round head	2
18		STD-425	WASHER, No. 10 plain	3
19		STD-860	SCREW, No. 10-32 x 5/8 long, fill. head	1
20		LW-16266-10-63	CLAMP	1
21		LW-25-2.31	BOLT, 1/4-20 x 2-5/16 long, hex. head	1
22		LW-25-2.00	BOLT, 1/4-20 x 2.00 long, hex. head	1
23		74655	SPACER, Exhaust manifold	1
24		73966	SPACER, Fuel manifold bracket	1
25		STD-8	WASHER, 1/4 plain	4
26		STD-160	WASHER, 1/4 lock, internal teeth	2
27		STD-1411	NUT, 1/4-20 plain	2
28		1102	PLUG, 1/8-27 NPT, allen head	1

Copyright, Lycoming Engines
Lycoming Engines is a division of Avco Corporation

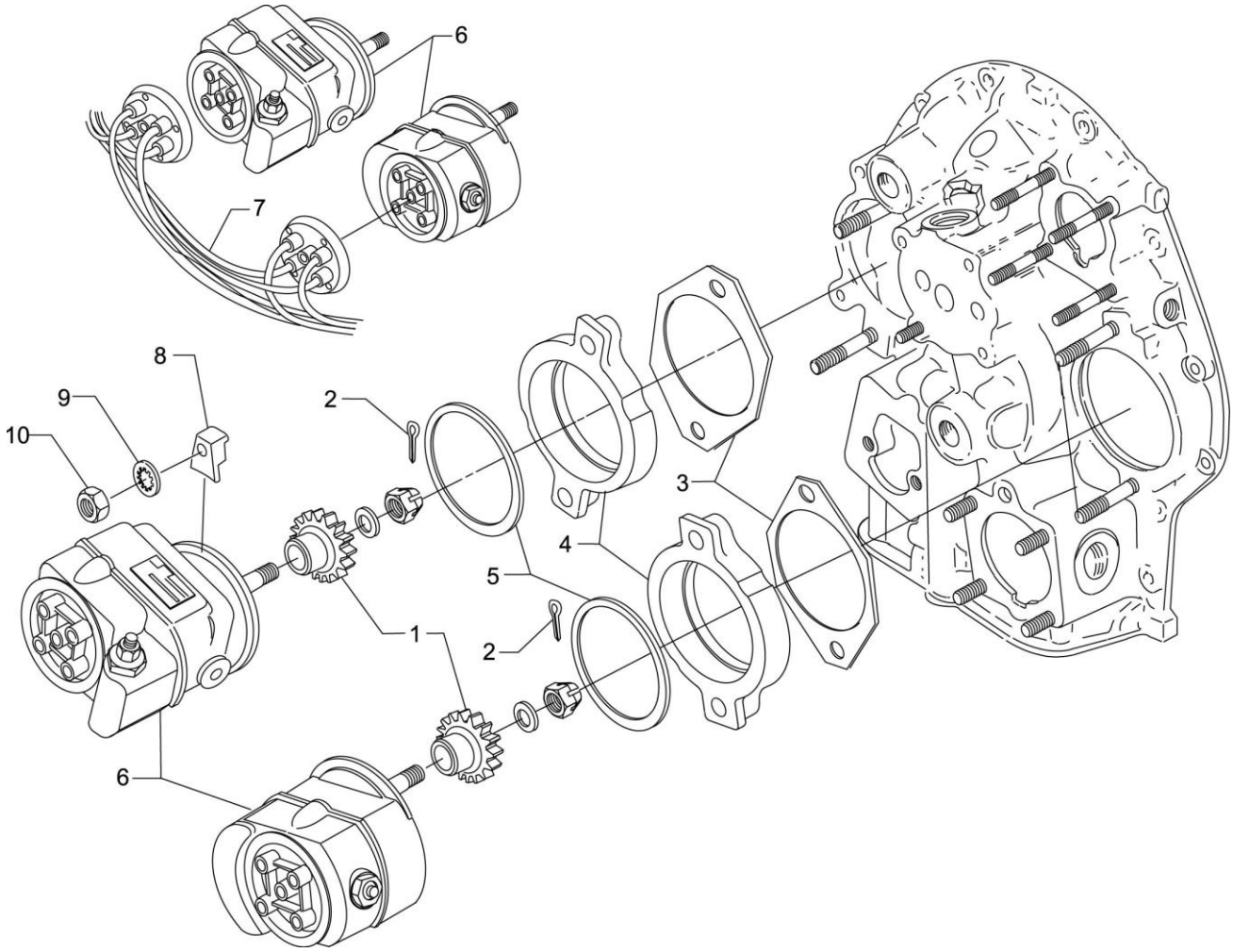

Figure 24
Magnetos, Magneto Drives, Harnesses and Spark Plugs

Effectivity: IO-360-L2A Engines
Copyright, Lycoming Engines
Lycoming Engines is a division of Avco Corporation

Distribution

FIGURE 24 -MAGNETOS, MAGNETO DRIVES, HARNESSES AND SPARK PLUGS

Figure Item	Code	Part Number	Description	Units per Assembly
1		61665	GEAR, Magneto, impulse	2
2		MS9245-44	COTTER PIN, 3/32 diameter x 5/8 long	2
3		62224	GASKET, Magneto adapter	2
4		LW-12706	ADAPTER, Magneto, impulse coupling	2
5		LW-12681	GASKET, Magneto	2
6	**V**	66GC20SFNN	MAGNETO, Impulse, right and left, Slick **V** 4371	2
	*	66GHC20SANN	MAGNETO, (ES4371)	2
7	**V**	67P20408	HARNESS ASSEMBLY, Right, Slick V M2512	1
	V	67P20409	HARNESS ASSEMBLY, Left, Slick **V** M2513	1
8		66M21195	CLAMP, Magneto	4
9		STD-475	WASHER, 5/16 lock, internal teeth	4
10		STD-1410	NUT, 5/16-18 plain	4
	**	76734	ZIP STRAP	4
	**	72815	BRACKET, Support clamp, 90º	1
	**	71824	CLAMP, Rubber dip, Two wire	3
	**	LW-16266-25-25	CLAMP, One wire	2

* Refer to the latest revision of Service Instruction No. 1443 for a listing of approved alternate ignition systems.
V Vendor Prime Manufacturer part
** These parts are shipped loose.

Copyright, Lycoming Engines

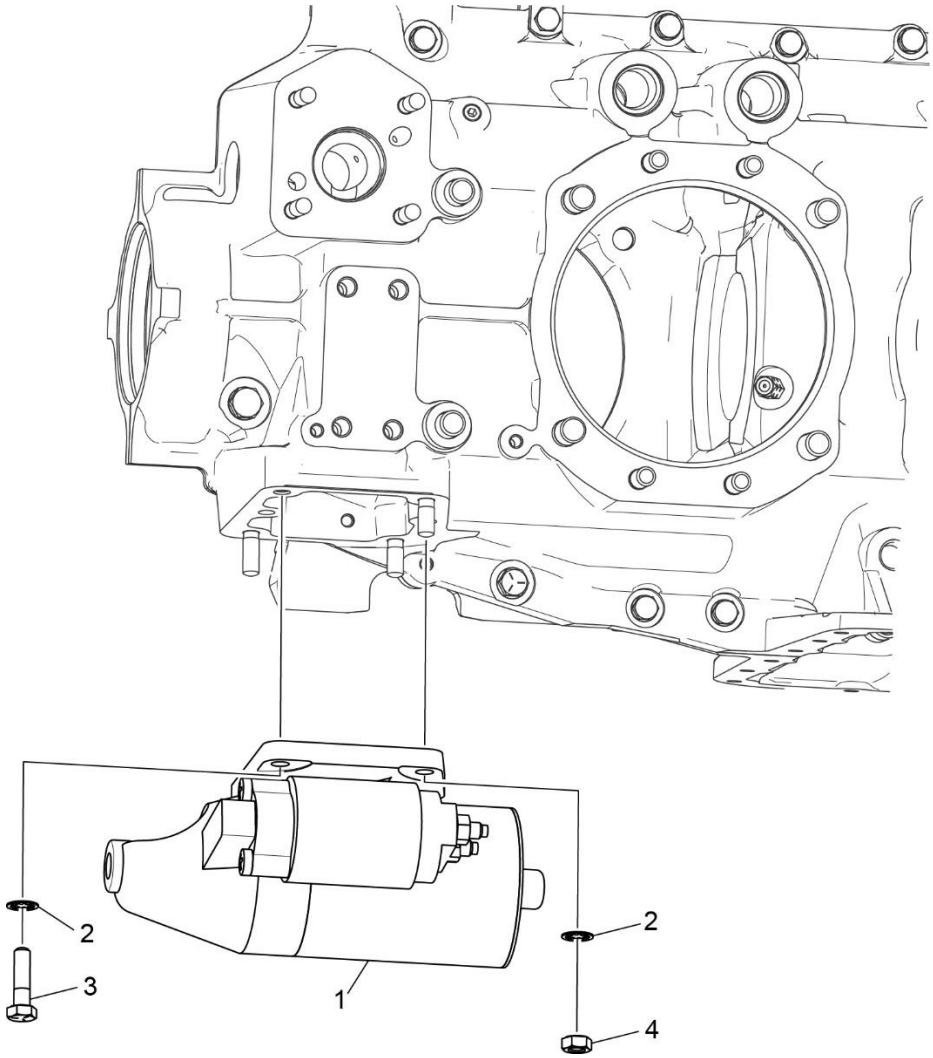

Figure 26
Starter Motor and Attaching Parts

Effectivity: IO-360-L2A Engines
Copyright, Lycoming Engines
Lycoming Engines is a division of Avco Corporation

Cranking

FIGURE 26 - STARTER MOTOR AND ATTACHING PARTS

Figure Item	Code	Part Number	Description	Units per Assembly
1	**V**	31A22104	STARTER, Sky-Tec, **V** 149-12LS	1
	V	31B22105	STARTER, Sky-Tec, **V** 149-24LS	1
	V	31B26554	STARTER, Sky-Tec, **V** 149NL/EC	1
2		STD-475	WASHER, 5/16 lock, internal teeth	4
3		LW-31-0.94	BOLT, 5/16-18 x 15/16 long, hex. head	1
4		STD-1410	NUT, 5/16-18 plain	3

V Vendor Prime Manufacturer part

NOTE: See latest revision of Lycoming Service Instruction No. 1154 for complete listing of FAA approved starters, generators, alternators, regulators and relays.

Copyright, Lycoming Engines

This page intentionally left blank

Effectivity: IO-360-L2A Engines
Copyright, Lycoming Engines
Lycoming Engines is a division of Avco Corporation

SERVICE KIT SECTION

SEAL AND GASKET SET

PART NO.	PART NAME	Qty.
75439-1	**KIT - SEAL AND GASKET SET**	**1**
AN901-8A	GASKET, Metal tube connect seal	1
LW-10332	LOCKPLATE, Crankshaft gear	1
LW-12272	LOCKPLATE. Shroud tube	4
LW-12681	GASKET, Magneto	2
06B23862	GASKET, Oil filter adapter	1
LW-13353	GASKET, Oil sump	1
LW-13792	SEAL, Crankshaft oil	1
LW-14260	SEAL, Tachometer drive oil	1
LW-14995	SPRING, Shroud tube	4
LW-18639	LOCKPLATE, Crankshaft gear	1
LW-18661	SEAL, Shroud tube	8
STD-475	WASHER, 5/16 lock, internal teeth	4
STD-213	SEAL, Oil, 3/4 I.D. x 1-3/8 O.D.	1
06A19956	SEAL, Oil, 7/8 I.D. x 1-1/2 O.D.	1
06E19769-0.63	GASKET, Annular, 5/8 I.D.	2
06E19769-1.00	GASKET, Annular, 1.00 I.D.	1
06E19769-1.25	GASKET, Annular, 1-1/4 I.D.	1
1691-C	GASKET, Fuel pump	1
60096	GASKET, Fuel pump	1
61173	GASKET, Oil pressure housing	1
61183	GASKET, Accessory adapter	1
62224	GASKET, Magneto adapter	3
66224	GASKET, Fuel injector	2
68315	GASKET, Accessory drive adapter	1
69164	GASKET, Fuel pump adapter	1
69345	SPACER	4
69551	GASKET, Accessory drive adapter	1
70310	SEAL, Shroud tube	8
70455	GASKET, 3/4 I.D. x 1-1/8 O.D.	1
71481	RING, Oil seal, 3/32 diameter x 4-27/32 I.D.	4
71973	GASKET, 2 bolt flange	4
72053	GASKET, Governor	2
72059	GASKET, Oil level gage	1
72075	SEAL, Oil, 3/32 section x 29/64 I.D.	6

Copyright, Lycoming Engines

Lycoming Engines is a division of Avco Corporation

SERVICE KIT SECTION (CONT.)

SEAL AND GASKET SET (CONT.)

75439-1	**KIT – SEAL AND GASKET SET (CONT.)**	**1**
72078	LOCKPLATE, 5/16 bolt	2
72091	RING, Oil seal, 3/8 I.D. x 7/64 diameter	2
72220	GASKET, Oil level gage	1
72312	RING, Oil seal, 1.00 x 1-5/16	1
72829	LOCKPLATE, 1/4 bolt x 1-3/4	1
73383	LOCKPLATE, 5/16 bolt x 1.00	2
73817	LOCKPLATE, 1/4 bolt x 1-3/4	2
73818	GASKET, Accessory housing	1
74065	RING, Oil level gage seal	1
74068	RING, Oil level gage plug	1
06B26669	GASKET, Rocker box cover (Silicone)	4
76510	GASKET, Oil cooler bypass valve	1
76940	SEAL, Crankshaft	1
77154	GASKET, Carburetor	1
77611	GASKET, Exhaust flange	4
8313	GASKET, Vacuum pump	1
77569	RING, Seal, intake pipe	4
MS29512-04	"O" RING	1
06A23493	SEAL, Shroud tube	8

Effectivity: IO-360-L2A Engines
Copyright, Lycoming Engines
Lycoming Engines is a division of Avco Corporation

SERVICE KIT SECTION (CONT.)

CYLINDER, PISTON AND RING ASSEMBLY

PART NO.	PART NAME	Qty.
05K21104	**KIT - CYLINDER, PISTON AND RING ASSEMBLY**	**1**
14D23912	CYLINDER ASSEMBLY	1
17B23936	VALVE, Exhaust	1
17A23938	VALVE, Intake	1
LW-11800	SPRING, Valve, outer	2
LW-11795	SPRING, Valve, inner	2
LW-10077	SEAT, Valve spring, upper, intake	1
LW-16475	SEAT, Valve spring, upper, exhaust	1
65441	SEAT, Valve spring, lower, intake	1
LW-13323	SEAT, Valve spring, lower, exhaust	1
60009	KEY, Valve, intake	2
17C21191	KEY, Valve, exhaust	2
17C19386	CAP, Valve stem, exhaust	1
MS20823-6D	ELBOW, 45º, 3/8 flared tube	1
1102	PLUG, 1/8-27 NPT, allen head	2
14D23912	PISTON	1
74241	RING, Piston, compression	2
14H29884	RING, Piston, oil regulating	1
LW-14078	PIN, Piston	1
71481	RING, Oil seal, 3/32 diameter x 4-27/32 I.D.	1
LW-18661	SEAL, Shroud tube	2
70310	SEAL, Shroud tube	2
06B26669	GASKET, Rocker box cover (Silicone)	1
72198	PLUG, Piston pin	2
77611	GASKET, Exhaust flange	1
71973	GASKET, 2 bolt flange	1
06A23493	SEAL, Shroud tube	2
LW-12272	LOCKPLATE, Shroud tube	1
SSP-299	TAG, Use of piston pin plugs	1

Copyright, Lycoming Engines

Lycoming Engines is a division of Avco Corporation

NUMERICAL INDEX

PART NO.	PART NAME	PAGE NO.
01F22880	SCREW	25
01K28983	BUSHING	17
01L23459	WASHER	21
02G21382	NIPPLE	43
05K19423-S	IMPELLER KIT	35
06A19956	OIL SEAL	39
06A23493	SEAL	21
06B23862	GASKET	41
06B26669	GASKET	25
06E19769-0.63	GASKET	41
06E19769-1.00	GASKET	31
06E19769-1.25	GASKET	9
07A19474	BRACKET	3
07A21443	BRACKET	1
07A22995	BRACKET	43
07A22996	BRACKET	43
07A23031	BRACKET	43
07A23032	BRACKET	43
07A28507	BRACKET ASSY	45
07A28507	BRACKET ASSY	47
07F23268	STRUT	3
07F29604	LINK	1
1028-B	BALL	9
1102	PLUG	7
1102	PLUG	19
1102	PLUG	33
1102	PLUG	43
1102	PLUG	47
1182-E7	SPARK PLUG	23
13B47121	CRANKSHAFT	11
13S19646	GEAR	11
14D23912	PISTON	17
14H29884	RING	17
14S23890	BOLT	17
15B21319	SOCKET	21
15B26066	PLUNGER ASSY	21
15B26262	BODY	9

PART NO.	PART NAME	PAGE NO.
15F28835-28	ROD ASSEMBLY	23
15F28835-29	ROD ASSEMBLY	23
15F28835-30	ROD ASSEMBLY	23
15F28835-31	ROD ASSEMBLY	23
15F28835-32	ROD ASSEMBLY	23
15F28835-33	ROD ASSEMBLY	23
15F28835-34	ROD ASSEMBLY	23
15F28835-35	ROD ASSEMBLY	23
15F28835-36	ROD ASSEMBLY	23
15F28835-37	ROD ASSEMBLY	23
15G23461	SHROUD TUBE	21
15M23452	CAMSHAFT ASSY	13
16A30080-01	CYLINDER ASSY	19
16R22126-P30	GUIDE	19
17A23938	VALVE	21
17B23936	VALVE	21
17C19386	CAP	21
17C21191	KEY	21
17D29055	SPRING	21
17D29060	SPRING	21
17F19357	ROCKER ASSY	23
18A26093	BEARING	9
18D26098	BEARING	9
18M26105	BEARING	17
21A21533-05	HOUSING ASSY	33
23D26777	PLUNGER	13
25C-10	STUD	31
25C-10	STUD	41
25C-22	STUD	33
25C-8	STUD	19
27A22099	GEAR ASSEMBLY	39
27D21252	ADAPTER ASSY	39
28F21254	ADAPTER ASSY	39
31A22104	STARTER	51
31B22105	STARTER	51
31B26554	STARTER	51
31C-12	STUD	7

Effectivity: IO-360-L2A Engines
Copyright, Lycoming Engines
Lycoming Engines is a division of Avco Corporation

PART NO.	PART NAME	PAGE NO.
31C-12	STUD	19
31C-12	STUD	33
31C-13	STUD	7
31C-17	STUD	31
31C-19	STUD	33
31CD-17	STUD	33
31M22045	SUPPORT ASSY	11
32B19549	ALTERNATOR	5
32C19553	ALTERNATOR	5
36B19484	PULLEY	5
37A19773-376	BELT	5
38-13	STUD	7
38-22	STUD	7
383-B	NUT	23
38D-17	STUD	7
50-15	STUD	7
53E22144	VALVE ASSY	41
56C23075	TUBE	29
60009	KEY	21
60096	GASKET	37
60430	COVER	39
60803	STRAP	15
61084	SPRING	9
61174	SHAFT	35
61183	GASKET	39
61247	COVER	25
61247-C	COVER	25
61665	GEAR	49
61J26428	FUEL INJECTOR	43
62224	GASKET	49
62417	PLUG	41
62B26931	FUEL PUMP	37
63B22997	MANIFOLD ASSY	43
63B26449	MANIFOLD ASSY	43
63B26706	MANIFOLD ASSY	43
63B26715	MANIFOLD ASSY	43
63B26716	MANIFOLD ASSY	43
63B26756	MANIFOLD ASSY	43

PART NO.	PART NAME	PAGE NO.
63C26450	NOZZLE	43
65441	SEAT	21
66224	GASKET	43
66610	BUSHING	19
66796	INSERT	19
66GC20SFNN	MAGNETO	49
66GHC20SANN	MAGNETO	49
66M21195	CLAMP	49
67P20408	HARNESS ASSY	49
67P20409	HARNESS ASSY	49
68315	GASKET	39
68484	TUBE	11
68668	SPRING	9
68759	TUBE ASSEMBLY	25
68760	TUBE ASSEMBLY	25
68761	TUBE ASSEMBLY	25
69106	COVER	33
69551	GASKET	33
69603	HOSE	27
69796	DOWEL	7
70310	SEAL	21
70484	SCREEN	31
70485	PIPE	27
71140	FITTING	41
71481	RING	23
71596	WASHER	39
71596	WASHER	39
71610	HOOK	25
71611	RETAINER	25
71824	CLAMP	49
71973	GASKET	27
72057-P20	SEAT	19
72058-P20	SEAT	19
72059	GASKET	29
72075	SEAL	9
72091	RING	9
72155-S	BUSHING	11
72198	PLUG	17

Copyright, Lycoming Engines

Lycoming Engines is a division of Avco Corporation

PART NO.	PART NAME	PAGE NO.
72377	ELBOW	45
72377	ELBOW	47
72566	GEAR	11
72815	BRACKET	47
72815	BRACKET	49
72970	GEAR ASSEMBLY	39
73152	BRACKET	31
73161	SPACER	43
73346	FLANGE	27
73383	LOCKPLATE	1
73383	LOCKPLATE	3
73818	GASKET	33
73966	SPACER	43
73966	SPACER	47
74065	RING	29
74241	RING	17
74637	BUSHING	23
74655	SPACER	47
74887	SPACER	23
74996	GEAR ASSEMBLY	13
75061	BOLT	17
75072	GEAR ASSEMBLY	13
75154	STUD	7
75339	BAFFLE ASSY	25
75380	LINK	3
75656-S	BUSHING	11
75657-S	BUSHING	11
76118	SPACER	13
76119	SHIELD	33
76121	SHAFT ASSY	13
76220	STUD	15
76534	SHIM	3
76734	ZIP STRAP	49
76908	STRUT	1
76943-P30	GUIDE	19
77467	SPRING	9
77611	GASKET	19
77808	VALVE ASSY	9

PART NO.	PART NAME	PAGE NO.
77852	OIL FILTER BASE	41
78531	BODY ASSEMBLY	35
78914	CONNECTION	31
8313	GASKET	39
8313	GASKET	39
AN6-16	BOLT	3
AN6-17	BOLT	3
AN6-34A	BOLT	15
AN815-4	UNION	47
AN816-8	NIPPLE	41
LRT23381	BODY ASSEMBLY	9
LW-10077	SEAT	21
LW-11485	SHROUD TUBE	21
LW-11713	SPRING	9
LW-11750	CONN ROD	17
LW-12098-0-180	TUBE ASSEMBLY	45
LW-12098-0-180	TUBE ASSEMBLY	47
LW-12186	NUT	17
LW-12272	LOCKPLATE	21
LW-12545	PLUG	31
LW-12681	GASKET	49
LW-12706	ADAPTER	49
LW-12798-4S172	HOSE ASSEMBLY	47
LW-12798-4S370	HOSE ASSEMBLY	45
LW-12798-4S370	HOSE ASSEMBLY	47
LW-12799-6S180	HOSE ASSEMBLY	45
LW-12799-6S180	HOSE ASSEMBLY	47
LW-12892	THRUST BUTTON	23
LW-13215	OIL FILTER	41
LW-13323	SEAT	21
LW-13353	GASKET	31
LW-13365	BRACE	1
LW-13389	BAFFLE ASSY	25
LW-13790	SHAFT	23
LW-13792	SEAL	9
LW-13793	STUD	7
LW-13796	SHAFT	13
LW-13861	SUMP ASSEMBLY	31

Effectivity: IO-360-L2A Engines
Copyright, Lycoming Engines
Lycoming Engines is a division of Avco Corporation

PART NO.	PART NAME	PAGE NO.
LW-14078	PIN	17
LW-14260	SEAL	35
LW-14318	ALTERNATOR	5
LW-14326	ALTERNATOR	5
LW-14768	GAGE ASSEMBLY	29
LW-14995	SPRING	21
LW-15592-5-04	CLAMP	25
LW-15592-8-28	CLAMP	27
LW-16266-10-13	CLAMP	45
LW-16266-10-13	CLAMP	47
LW-16266-10-63	CLAMP	45
LW-16266-10-63	CLAMP	47
LW-16266-10-75	CLAMP	45
LW-16266-10-75	CLAMP	47
LW-16266-25-25	CLAMP	49
LW-16471	SUPPORT ASSY	11
LW-16475	SEAT	21
LW-18085	SPRING	9
LW-18109	IMPELLER	35
LW-18110	IMPELLER ASSY	35
LW-18402-2	CRANKCASE	7
LW-18402-5	CRANKCASE	7
LW-18639	LOCKPLATE	11
LW-18661	SEAL	21
LW-18667	PIN	13
LW-18840	CAMSHAFT ASSY	13
LW-25-0.94	BOLT	31
LW-25-0.94	BOLT	35
LW-25-1.00	BOLT	41
LW-25-1.13	BOLT	15
LW-25-1.13	BOLT	31
LW-25-1.13	BOLT	35
LW-25-1.25	BOLT	27
LW-25-1.44	BOLT	35
LW-25-1.50	BOLT	15
LW-25-1.63	BOLT	15
LW-25-1.88	BOLT	15
LW-25-2.00	BOLT	47

PART NO.	PART NAME	PAGE NO.
LW-25-2.31	BOLT	47
LW-25S1.50	BOLT	15
LW-31-0.94	BOLT	1
LW-31-0.94	BOLT	3
LW-31-0.94	BOLT	51
LW-31H0.75	BOLT	3
LW-31H0.88	BOLT	1
LW-31H0.88	BOLT	13
LW-31H1.06	BOLT	1
MS20822-4	ELBOW	43
MS20823-6D	ELBOW	19
MS20823-8	ELBOW	41
MS35335-33	WASHER	25
MS35489-20X	GROMMET	25
MS9245-44	COTTER PIN	49
NAS1149F0632P	WASHER	15
STD-8	WASHER	15
STD-8	WASHER	27
STD-8	WASHER	31
STD-8	WASHER	35
STD-8	WASHER	39
STD-8	WASHER	41
STD-8	WASHER	47
STD-33	WASHER	15
STD-33	WASHER	37
STD-35	WASHER	1
STD-35	WASHER	3
STD-35	WASHER	19
STD-35	WASHER	33
STD-35	WASHER	35
STD-35	WASHER	39
STD-35	WASHER	43
STD-82	SCREW	43
STD-91	PLUG	31
STD-148	NIPPLE	43
STD-160	WASHER	15
STD-160	WASHER	27
STD-160	WASHER	31

Copyright, Lycoming Engines
Lycoming Engines is a division of Avco Corporation

PART NO.	PART NAME	PAGE NO.
STD-160	WASHER	35
STD-160	WASHER	39
STD-160	WASHER	41
STD-160	WASHER	47
STD-251	WASHER	43
STD-295	GASKET	23
STD-425	WASHER	45
STD-425	WASHER	47
STD-475	WASHER	1
STD-475	WASHER	19
STD-475	WASHER	33
STD-475	WASHER	39
STD-475	WASHER	43
STD-475	WASHER	49
STD-475	WASHER	51
STD-514	DOWEL	7
STD-551	PLUG	31
STD-557	DOWEL	7
STD-596	NUT	15
STD-670	LOCKNUT	45
STD-670	LOCKNUT	47
STD-678	WASHER	15
STD-684	NIPPLE	25
STD-690	WASHER	3
STD-692	SCREW	45
STD-692	SCREW	47
STD-713	COTTER PIN	3
STD-784	PLUG	33
STD-860	SCREW	45
STD-860	SCREW	47
STD-872	NUT	3

PART NO.	PART NAME	PAGE NO.
STD-872	NUT	15
STD-1065	DOWEL	11
STD-1211	PLUG	11
STD-1339	PLUG	7
STD-1353	INSERT	19
STD-1410	NUT	19
STD-1410	NUT	33
STD-1410	NUT	39
STD-1410	NUT	43
STD-1410	NUT	49
STD-1410	NUT	51
STD-1411	NUT	15
STD-1411	NUT	21
STD-1411	NUT	31
STD-1411	NUT	39
STD-1411	NUT	41
STD-1411	NUT	47
STD-1420	NUT	35
STD-1623	INSERT	7
STD-1727	WASHER	3
STD-1774	PIN	39
STD-1821	HOSE	25
STD-1882	SCREW	37
STD-1925	SCREW	25
STD-2090	NUT	23
STD-2168	NUT	13
STD-2197	WASHER	1
STD-2229	PLUG	31
STD-2231	RING	13
STD-2246	BOLT	11
STD-2249	NUT	15

Copyright, Lycoming Engines
Lycoming Engines is a division of Avco Corporation